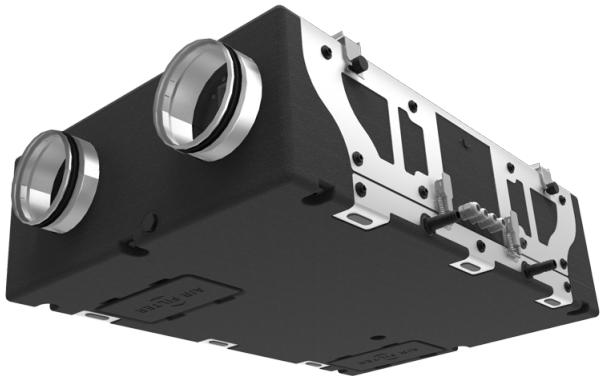

KOMFORT EC D5B 180

Heat and energy recovery air handling units

- Heat exchanger type: Counter flow
- Heat exchanger material: Polystyrene, Enthalpy
- Sound-insulated casing
- Bypass: Manual
- BMS protocol: ModBus
- Casing material: EPP
- Humidity sensor: Optional
- CO2 sensor: Optional
- PM2.5 sensor: Optional

Lineup	Maximum airflow, m³/h	Service side	Control system	Reheater	Preheater	BMS protocol
KOMFORT EC D5B 180 S21	220	Universal	S21	Optional	Optional	ModBus
KOMFORT EC D5B 180 S14	220	Universal	S14	✕	✕	✕
KOMFORT EC D5B 180-E S21	220	Universal	S21	Optional	Optional	ModBus
KOMFORT EC D5B 180-E S14	220	Universal	S14	✕	✕	✕