WMG 3/4-6

Water mixing units



	Unit of measurement	WMG 3/4-6
Phases	-	1
Minimum supply voltage	V	230
Maximum supply voltage	V	230
Power supply frequency	Hz	50
Weight	kg	4.1

Dimensions

B	H	H1	L
150	290	180	460

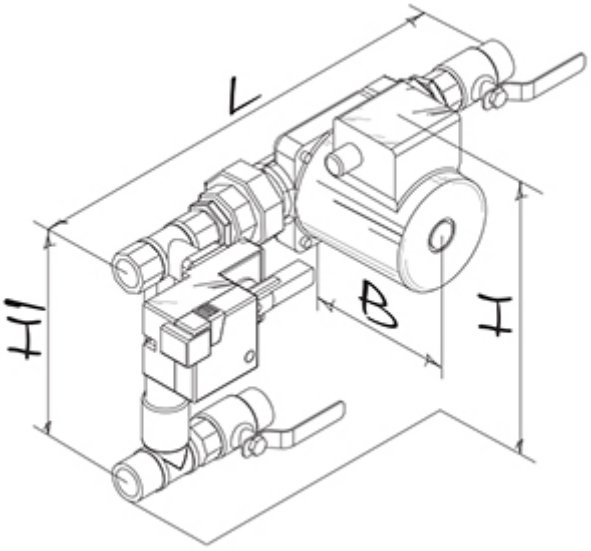
L
H1
B
H