

Wind 125 T

Extract fans

- Casing material: Plastic
- Timer: Turn off timer

	Unit of measurement	Wind 125 T
Minimum supply voltage	V	220
Maximum supply voltage	V	240
Power supply frequency	Hz	50
Maximum airflow	m³/h	185
Ingress protection rating	-	IP24
Impeller material	-	Plastic

Dimensions

a	b	e	c	D
186	173	60	53	125

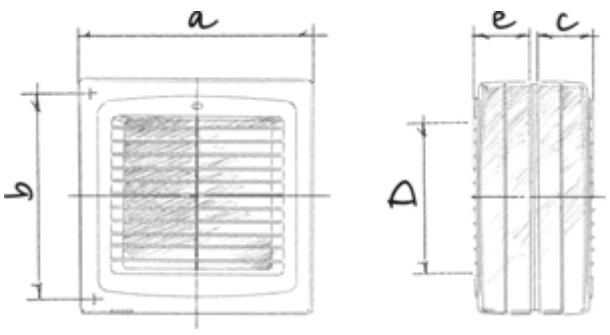

Ecodesign

Trademark	Blauberg					
Model	Wind 125 T					
Specific energy consumption (SEC) (kWh/(m²/a))	Cold		Average		Warm	
	-28.2	B	-13.2	E	-4.6	F
Type of ventilation unit	Unidirectional					
Type of drive installed	Multi-speed					
Type of heat recovery system	None					
Maximum flow rate (m³/h)	185					
Electric power input (W)	22					
Reference flow rate (m³/s)	0.036					
Specific power input (SPI) (W/(m³/h))	0.076					
Control typology	Clock control					
Maximum external leakage rates (%)	2.7					
Airflow sensitivity at +20 Pa and -20 Pa (%)	0.15					
The indoor/outdoor air tightness (m³/h)	1					
Declared typology	RVU UVU					
Sound power level (dB(A))	55					
The annual electricity consumption (AEC) (kWh/a)	Cold		Average		Warm	
	100		100		100	
The annual heating saved (AHS) (kWh/a)	Cold		Average		Warm	
	3075		1572		711	