

VRVS 315

Backdraft air dampers for round ducts

- Casing material: Galvanized steel

	Unit of measurement	VRVS 315
Weight	kg	3.24

Dimensions

ØD	B	L
314	356	340

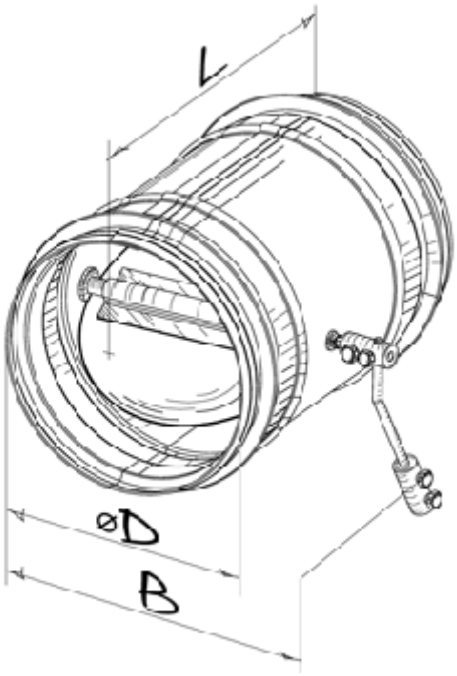
L
øD
B