

VRVS 250

Backdraft air dampers for round ducts

- Casing material: Galvanized steel

	Unit of measurement	VRVS 250
Weight	kg	2.2

Dimensions

ØD	B	L
249	290	270

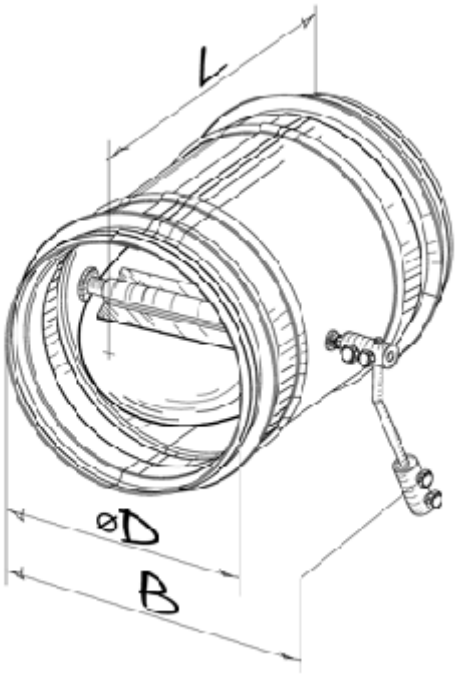
L
øD
B