

# VRVS 150

Backdraft air dampers for round ducts

- Casing material: Galvanized steel

| | Unit of measurement | VRVS 150 |
|---|---|---|
| Weight | kg | 0.97 |

## Dimensions

| ØD | B | L |
|---|---|---|
| 149 | 194 | 180 |

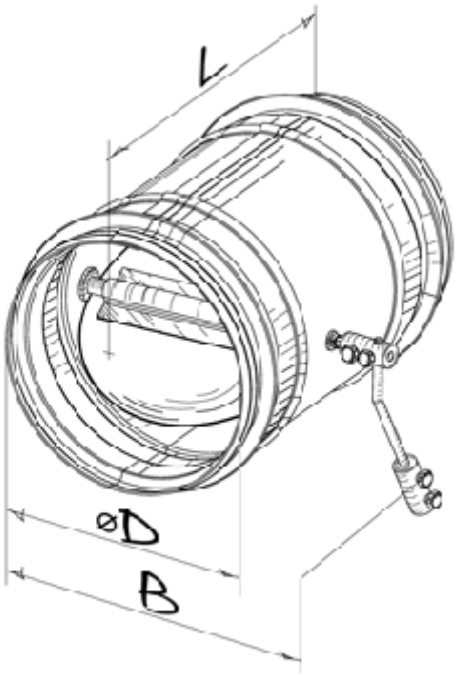
L
øD
B