

VRVS 125

Backdraft air dampers for round ducts

- Casing material: Galvanized steel

	Unit of measurement	VRVS 125
Weight	kg	0.81

Dimensions

ØD	B	L
124	162	170

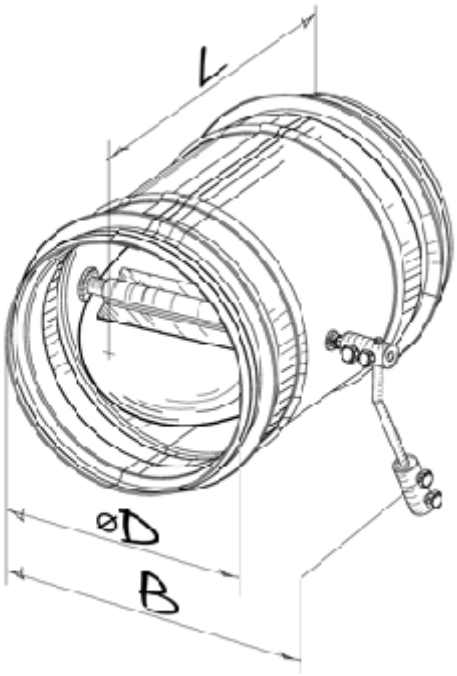
L
øD
B