

VKA 80

Air dampers for round ducts

- Casing material: Galvanized steel

	Unit of measurement	VKA 80
Weight	kg	0.6

Dimensions

ØD	B	L	H
79	190	200	170

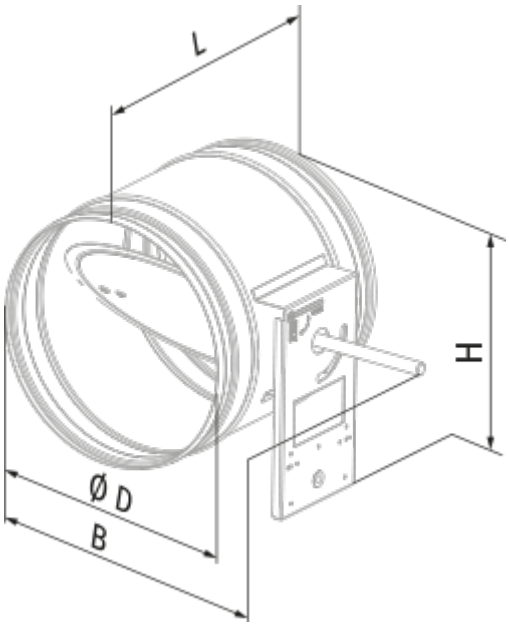
L
H
Ø D
B