

VKA 450

Air dampers for round ducts

- Casing material: Galvanized steel

	Unit of measurement	VKA 450
Weight	kg	3.78

Dimensions

ØD	B	L	H
449	570	240	

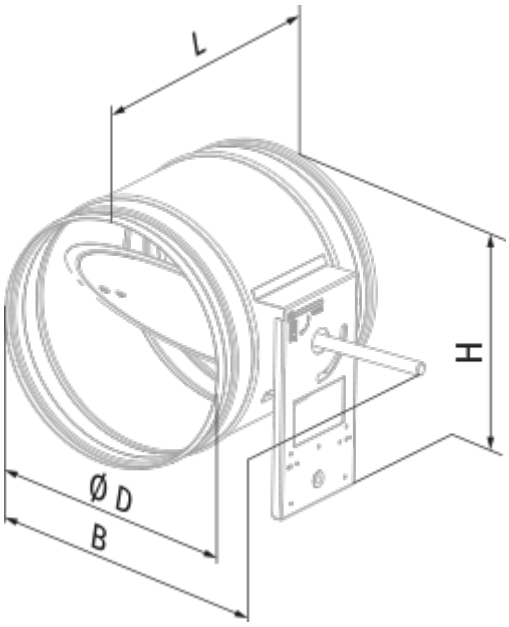
L
H
Ø D
B