

VKA 400

Air dampers for round ducts

- Casing material: Galvanized steel

	Unit of measurement	VKA 400
Weight	kg	3.26

Dimensions

ØD	B	L	H
399	520	240	

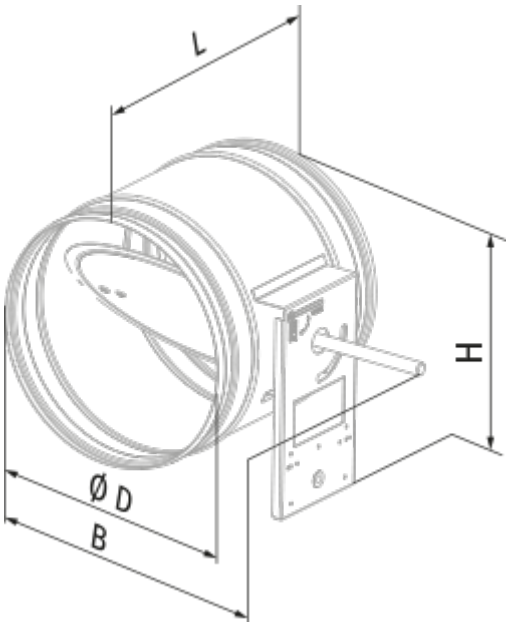
L
H
Ø D
B