

VKA 355

Air dampers for round ducts

- Casing material: Galvanized steel

	Unit of measurement	VKA 355
Weight	kg	2.75

Dimensions

ØD	B	L	H
348	475	240	

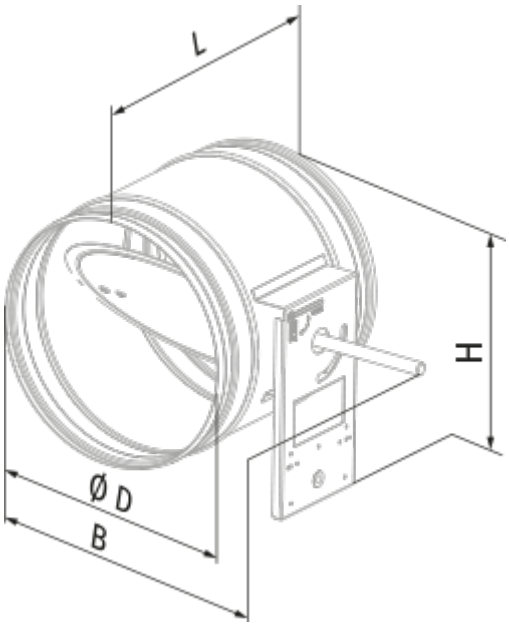
L
H
Ø D
B