

VKA 315

Air dampers for round ducts

- Casing material: Galvanized steel

	Unit of measurement	VKA 315
Weight	kg	2.44

Dimensions

ØD	B	H	L
314	435	240	

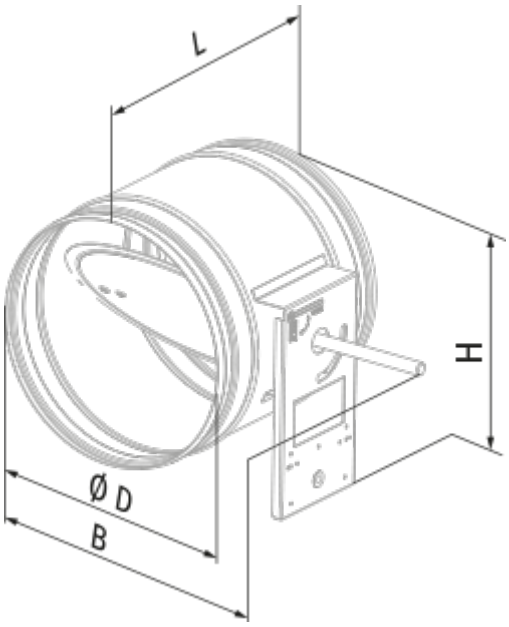
L
H
Ø D
B