

VKA 250

Air dampers for round ducts

- Casing material: Galvanized steel

	Unit of measurement	VKA 250
Weight	kg	1.68

Dimensions

ØD	B	L	H
249	370	200	255

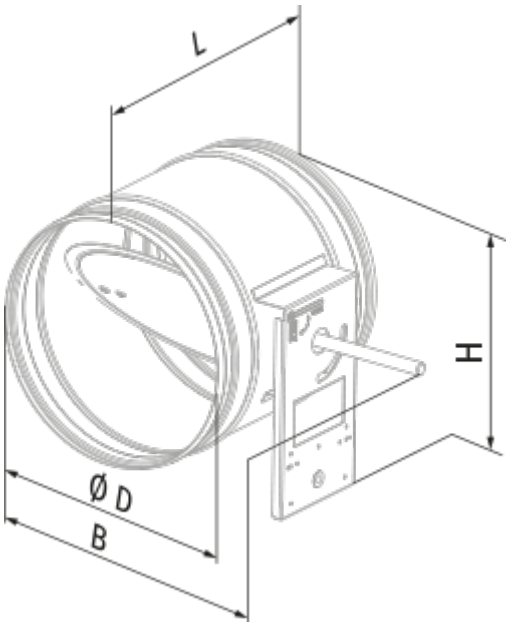
L
H
Ø D
B