

VKA 200

Air dampers for round ducts

- Casing material: Galvanized steel

	Unit of measurement	VKA 200
Weight	kg	1.33

Dimensions

ØD	B	L	H
199	320	200	230

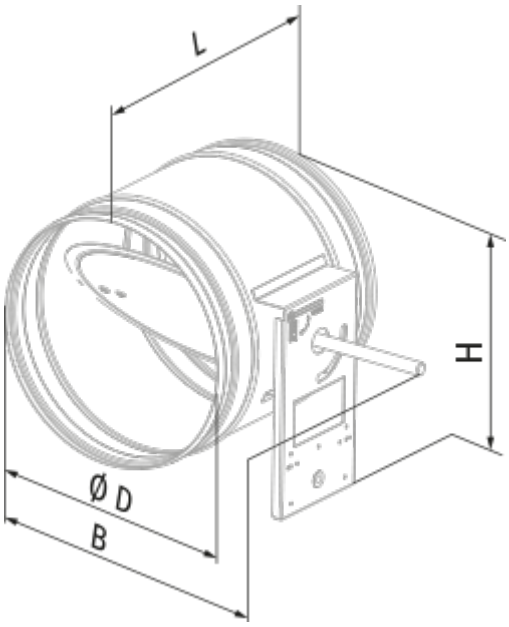
L
H
Ø D
B