

VKA 160

Air dampers for round ducts

- Casing material: Galvanized steel

	Unit of measurement	VKA 160
Weight	kg	1.07

Dimensions

ØD	B	L	H
159	280	200	210

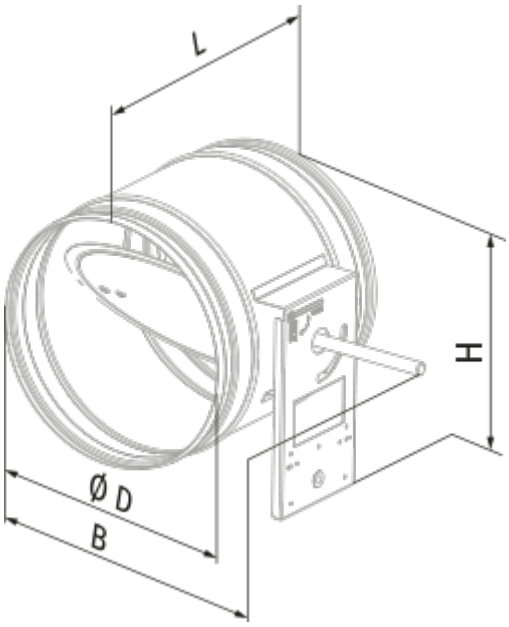
L
H
Ø D
B