

VKA 150

Air dampers for round ducts

- Casing material: Galvanized steel

	Unit of measurement	VKA 150
Weight	kg	1.01

Dimensions

ØD	B	L	H
149	270	200	205

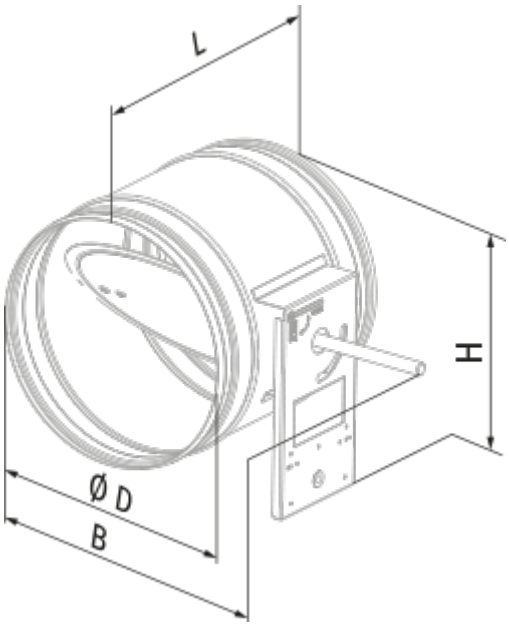
L
H
Ø D
B