

VKA 125

Air dampers for round ducts

- Casing material: Galvanized steel

	Unit of measurement	VKA 125
Weight	kg	0.86

Dimensions

ØD	B	L	H
124	245	200	195

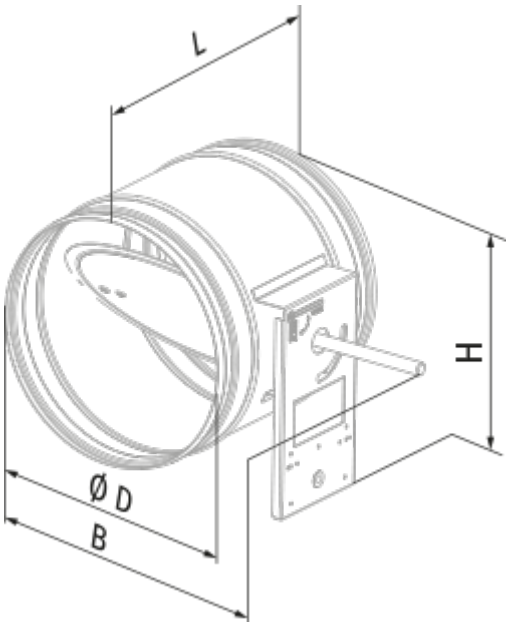
L
H
Ø D
B