

VKA 100

Air dampers for round ducts

- Casing material: Galvanized steel

	Unit of measurement	VKA 100
Weight	kg	0.72

Dimensions

ØD	B	L	H
99	220	200	180

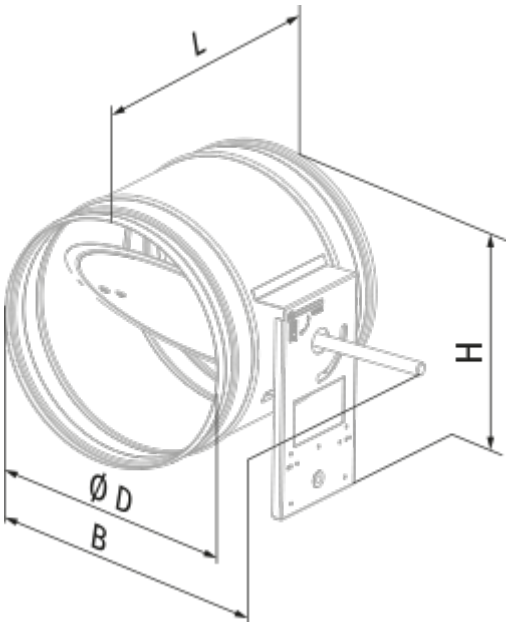
L
H
Ø D
B