

VENTO inHome W

Brand new dMVHR solutions for newbuild and retrofit single-room applications, offer efficient and cost-effective ventilation

- Air flow in heat recovery mode: 25
- Sound pressure level LpA at 1 m: 36
- Heat exchanger material: Ceramic
- Sound-insulated casing
- Enthalpy heat exchanger
- Control: Smartphone
- Humidity sensor
- Shutters

	Unit of measurement	VENTO inHome W		
Speed	-	1	2	3
Phases	-	1		
Minimum supply voltage	V	100		
Maximum supply voltage	V	240		
Power supply frequency	Hz	50/60		
Air flow in ventilation mode	m³/h	15	35	50
Air flow in heat recovery mode	m³/h	8	15	25
Sound pressure level LpA at 1 m	dB(A)	20	30	36
Heat recovery efficiency, max	%	95		
Heat exchanger material	-	Ceramic		
Transported air temperature (max)	°C	40		
Transported air temperature (min)	°C	-20		
Ambient air temperature min	°C	1		
Ambient air temperature max	°C	40		
Ingress protection rating	-	IP24		
Ambient air humidity max	%	65		
Minimum wall thickness	mm	255		
Maximum wall thickness	mm	490		

Dimensions

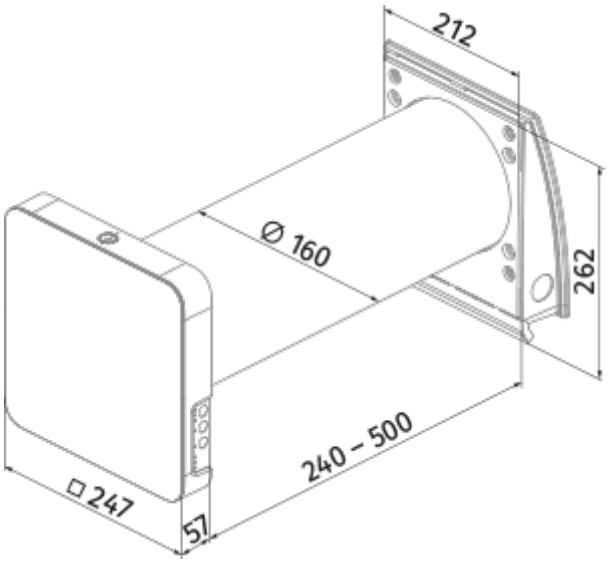

Ecodesign

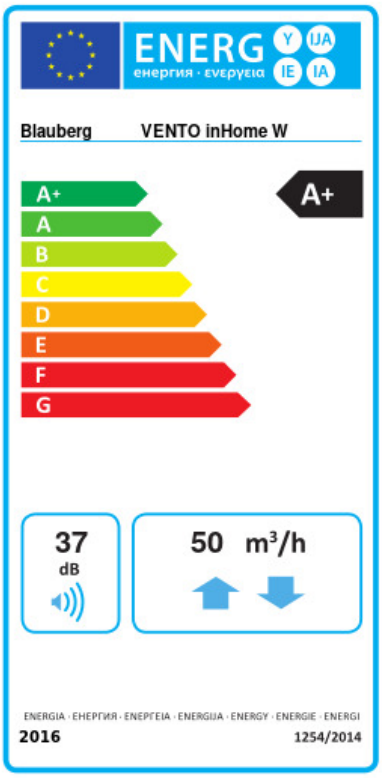

Trademark	Blauberg					
Model	VENTO inHome W					
Specific energy consumption (SEC) (kWh/(m²/a))	Cold		Average		Warm	
	-87.8	A+	-44.4	A+	-19.6	E
Type of ventilation unit	Bidirectional					
Type of drive installed	Variable speed					
Type of heat recovery system	Regenerative					
Thermal efficiency of heat recovery (%)	84					
Maximum flow rate (m³/h)	50					
Electric power input (W)	3.4					
Reference flow rate (m³/s)	0.01					
Specific power input (SPI) (W/(m³/h))	0.063					
Control typology	Local demand control					
Maximum internal leakage rates (%)	2.7					
Mixing rate (%)	1					
Airflow sensitivity at +20 Pa and -20 Pa (%)	2.3					
The indoor/outdoor air tightness (m³/h)	2.7					
Declared typology	RVU BVU					
Sound power level (dB(A))	41					
The annual electricity consumption (AEC) (kWh/a)	Cold		Average		Warm	
	37		37		37	
The annual heating saved (AHS) (kWh/a)	Cold		Average		Warm	
	89		45		21	

Accessories

CO2 sensors

Name	Photo	Description
CD-1		CO2 sensors
CD-2		CO2 sensors

Other accessories

Name	Photo	Description
R 160-500		Air duct 160 mm and polystyrene foam plug
R 160-700	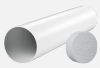	Air duct 160 mm and polystyrene foam plug
FPC 150x50 F7		Filter
FP2 Vento G3		G3 filter kit (2 pcs.)
FP2 Vento F7		Fine filter F7 Includes: • plastic filter holder (1 pc.) • F7 fine filter (1 pc.). Filtration rate PM2.5 > 70 %
FB Vento Expert A50		Remote control
Pre-installation Kit Vento inHome		Pre-installation kit for mounting into walls with standard thickness. Includes: air duct, AH-11 white 160 outer ventilation hood, polystyrene foam plug, polystyrene foam wedges
Pre-installation Kit Vento inHome S		Pre-installation kit for mounting into thin walls. Includes: air duct, AH-S chrome 160 outer ventilation hood, polystyrene foam plug, polystyrene foam wedges
Completion Kit Vento inHome		Final mounting kit. Includes: regenerator module, fan module, G3 filters (2 pcs.), indoor unit with a controller and shutters, remote control

Hoods

Name	Photo	Description
AH-S chrome 160		Stainless steel ventilation hood
AH-S white 160		Stainless steel ventilation hood
AH-10 beige 160		Plastic hoods decoration of supply and exhaust vents of public, residential and industrial ventilation systems
AH-10 black 160		Plastic hoods decoration of supply and exhaust vents of public, residential and industrial ventilation systems

AH-10 brown 160		Plastic hoods decoration of supply and exhaust vents of public, residential and industrial ventilation systems
AH-10 chrome 160		Plastic hoods decoration of supply and exhaust vents of public, residential and industrial ventilation systems
AH-10 grey 160		Plastic hoods decoration of supply and exhaust vents of public, residential and industrial ventilation systems
AH-10 terracotta 160		Plastic hoods decoration of supply and exhaust vents of public, residential and industrial ventilation systems
AH-10 white 160		Plastic hoods decoration of supply and exhaust vents of public, residential and industrial ventilation systems
AH-11 vintage 160		Plastic hoods decoration of supply and exhaust vents of public, residential and industrial ventilation systems
AH-11 black 160		Plastic hoods decoration of supply and exhaust vents of public, residential and industrial ventilation systems
AH-11 grey 160		Plastic hoods decoration of supply and exhaust vents of public, residential and industrial ventilation systems
AH-11 terracotta 160		Plastic hoods decoration of supply and exhaust vents of public, residential and industrial ventilation systems
AH-11 white 160		Plastic hoods decoration of supply and exhaust vents of public, residential and industrial ventilation systems
PP 160/0.5		The outer hood is designed to prevent the ingress of water and large objects into the ventilation equipment from outside
AH-8 white 160		Outer ventilation hood with frost protection for a cold climate
AH-8 chrome 160		Outer ventilation hood with frost protection for a cold climate
AH-11 anthracite grey 160		Plastic hoods decoration of supply and exhaust vents of public, residential and industrial ventilation systems

Plastic

Name	Photo	Description
KIT BlauPlast white 160		Kit for angular mounting (for walls with standard thickness)
KIT BlauPlast chrome 160		Kit for angular mounting (for walls with standard thickness)