

VENTO inHome mini M

Brand new dMVHR solutions for newbuild and retrofit single-room applications, offer efficient and cost-effective ventilation

- Air flow in heat recovery mode: 13
- Sound pressure level LpA at 1 m: 33
- Heat exchanger material: Ceramic
- Sound-insulated casing
- Enthalpy heat exchanger
- Control: Built-in control panel, Remote Control
- Humidity sensor

	Unit of measurement	VENTO inHome mini M		
Phases	-	1		
Minimum supply voltage	V	100		
Maximum supply voltage	V	240		
Power supply frequency	Hz	50/60		
Air flow in ventilation mode	m³/h	8	16	25
Air flow in heat recovery mode	m³/h	4	8	13
Sound pressure level LpA at 1 m	dB(A)	20	26	33
Heat recovery efficiency, max	%	81		
Heat exchanger material	-	Ceramic		
Transported air temperature (max)	°C	40		
Transported air temperature (min)	°C	-15		
Ambient air temperature min	°C	1		
Ambient air temperature max	°C	40		
Ingress protection rating	-	IP24		
Ambient air humidity max	%	65		
Minimum wall thickness	mm	155		
Maximum wall thickness	mm	490		

Dimensions

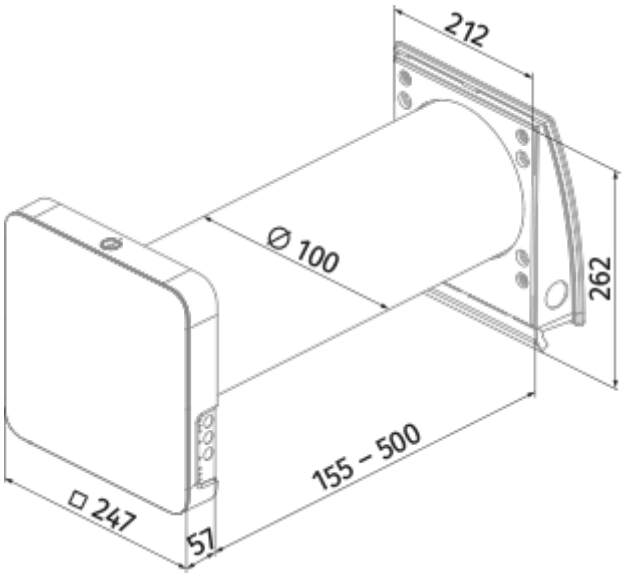

Ecodesign

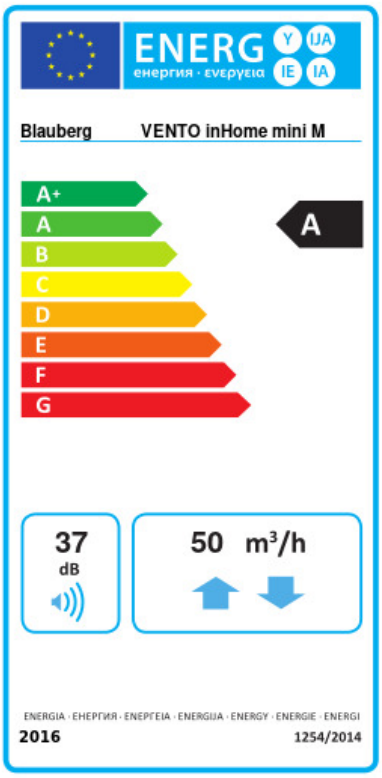

Trademark	Blauberg					
Model	VENTO inHome mini M					
Specific energy consumption (SEC) (kWh/(m²/a))	Cold		Average		Warm	
	-81.5	A+	-40.9	A	-17.7	E
Type of ventilation unit	Bidirectional					
Type of drive installed	Variable speed					
Type of heat recovery system	Regenerative					
Thermal efficiency of heat recovery (%)	74					
Maximum flow rate (m³/h)	50					
Electric power input (W)	3.2					
Reference flow rate (m³/s)	0.005					
Specific power input (SPI) (W/(m³/h))	0.122					
Control typology	Local demand control					
Maximum internal leakage rates (%)	2.7					
Mixing rate (%)	1					
Airflow sensitivity at +20 Pa and -20 Pa (%)	2.4					
The indoor/outdoor air tightness (m³/h)	2.7					
Declared typology	RVU BVU					
Sound power level (dB(A))	37					
The annual electricity consumption (AEC) (kWh/a)	Cold		Average		Warm	
	58		58		58	
The annual heating saved (AHS) (kWh/a)	Cold		Average		Warm	
	83		42		19	

Accessories

CO2 sensors

Name	Photo	Description
CD-1		CO2 sensors
CD-2		CO2 sensors

Hoods

Name	Photo	Description
AH-S chrome 100		Stainless steel ventilation hood
AH-S white 100		Stainless steel ventilation hood
AH-10 beige 100		Plastic hoods decoration of supply and exhaust vents of public, residential and industrial ventilation systems
AH-10 black 100		Plastic hoods decoration of supply and exhaust vents of public, residential and industrial ventilation systems
AH-10 brown 100		Plastic hoods decoration of supply and exhaust vents of public, residential and industrial ventilation systems
AH-10 chrome 100		Plastic hoods decoration of supply and exhaust vents of public, residential and industrial ventilation systems
AH-10 grey 100		Plastic hoods decoration of supply and exhaust vents of public, residential and industrial ventilation systems
AH-10 terracotta 100		Plastic hoods decoration of supply and exhaust vents of public, residential and industrial ventilation systems
AH-10 white 100		Plastic hoods decoration of supply and exhaust vents of public, residential and industrial ventilation systems
AH-11 vintage 100		Plastic hoods decoration of supply and exhaust vents of public, residential and industrial ventilation systems
AH-11 black 100		Plastic hoods decoration of supply and exhaust vents of public, residential and industrial ventilation systems
AH-11 grey 100		Plastic hoods decoration of supply and exhaust vents of public, residential and industrial ventilation systems
AH-11 terracotta 100		Plastic hoods decoration of supply and exhaust vents of public, residential and industrial ventilation systems
AH-11 white 100		Plastic hoods decoration of supply and exhaust vents of public, residential and industrial ventilation systems

AH-11 anthracite grey 100		Plastic hoods decoration of supply and exhaust vents of public, residential and industrial ventilation systems
AH-8 white 100		Outer ventilation hood with frost protection for a cold climate
AH-8 chrome 100		Outer ventilation hood with frost protection for a cold climate

Plastic

Name	Photo	Description
KIT BlauPlast white 100		Kit for angular mounting (for walls with standard thickness)
KIT BlauPlast chrome 100		Kit for angular mounting (for walls with standard thickness)

Other accessories

Name	Photo	Description
FP3 Vento G3		G3 filter kit (2 pcs.)
R 100-500	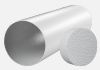	Air duct 100 mm and polystyrene foam plug
R 100-700		Air duct 100 mm and polystyrene foam plug
FB Vento Expert A50		Remote control
Pre-installation Kit Vento inHome mini		Pre-installation kit for mounting into walls with standard thickness. Includes: air duct, AH-11 white 160 outer ventilation hood, polystyrene foam plug, polystyrene foam wedges
Pre-installation Kit Vento inHome mini S		Pre-installation kit for mounting into thin walls. Includes: air duct, AH-S chrome 160 outer ventilation hood, polystyrene foam plug, polystyrene foam wedges
Completion Kit Vento inHome mini		Final mounting kit. Includes: regenerator module, fan module, G3 filters (2 pcs.), indoor unit with a controller and shutters, remote control