

VENTO Expert DUO A30-1 S10 W V.2

Single-room heat recovery units with Wi-Fi control

- Sound pressure level LpA at 1 m: 43
- Heat exchanger type: Reversible
- Heat exchanger material: Ceramic
- Enthalpy heat exchanger
- Control: Smartphone
- Humidity sensor: Built-in
- CO2 sensor: Optional
- PM2.5 sensor: Optional
- Temperature sensor: Optional
- Shutters

	Unit of measurement	VENTO Expert DUO A30-1 S10 W V.2		
Phases	-	1		
Minimum supply voltage	V	100		
Maximum supply voltage	V	240		
Power supply frequency	Hz	50/60		
Maximum airflow	m³/h	10	20	30
Sound pressure level LpA at 1 m	dB(A)	33	40	43
Heat recovery efficiency, max	%	85		
Heat exchanger type	-	Reversible		
Heat exchanger material	-	Ceramic		
Transported air temperature (max)	°C	40		
Transported air temperature (min)	°C	-15		
Ambient air temperature min	°C	1		
Ambient air temperature max	°C	40		
Ingress protection rating	-	IP24		
Ambient air humidity max	%	80		
Minimum wall thickness	mm	280		
Maximum wall thickness	mm	500		

Dimensions

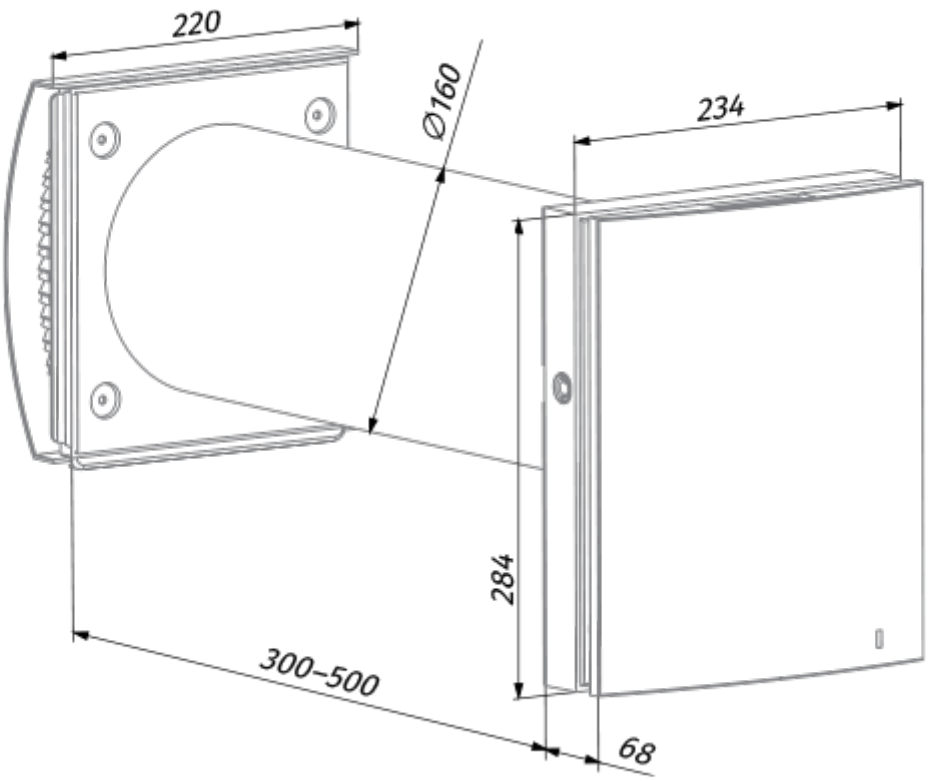

Ecodesign

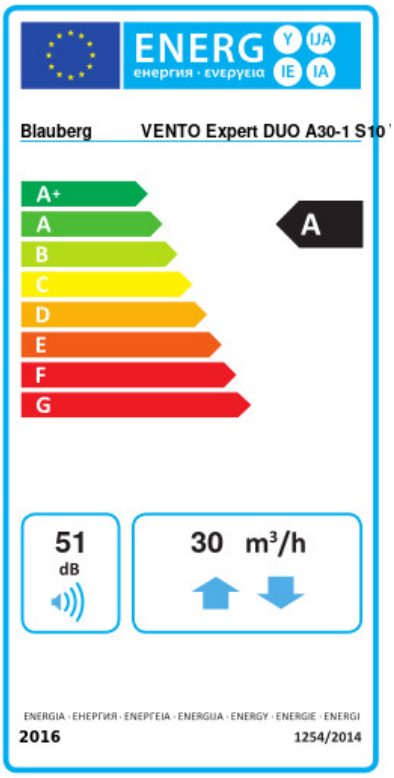

Trademark	Blauberg					
Model	VENTO Expert DUO A30-1 S10 W V.2					
Specific energy consumption (SEC) (kWh/(m²/a))	Cold		Average		Warm	
	-81.6	A+	-40.4	A	-16.8	E
Type of ventilation unit	Bidirectional					
Type of drive installed	Variable speed					
Type of heat recovery system	Regenerative					
Thermal efficiency of heat recovery (%)	74					
Maximum flow rate (m³/h)	30					
Electric power input (W)	6.6					
Reference flow rate (m³/s)	0.006					
Specific power input (SPI) (W/(m³/h))	0.183					
Control typology	Local demand control					
Maximum internal leakage rates (%)	2.7					
Mixing rate (%)	1					
Airflow sensitivity at +20 Pa and -20 Pa (%)	0.37					
The indoor/outdoor air tightness (m³/h)	5.2					
Declared typology	RVU BVU					
Sound power level (dB(A))	51					
The annual electricity consumption (AEC) (kWh/a)	Cold		Average		Warm	
	107		107		107	

Accessories

Control Panels

Name	Photo	Description
SE Vento Expert W		Control panel

CO2 sensors

Name	Photo	Description

CD-1		CO2 sensors
CD-2		CO2 sensors

Other accessories

Name	Photo	Description
R 160-500		Air duct 160 mm and polystyrene foam plug
R 160-700	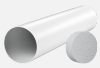	Air duct 160 mm and polystyrene foam plug
S Vento Expert A30		
FPC 150x50 F7		Filter
FP2 Vento F7		Fine filter F7 Includes: • plastic filter holder (1 pc.) • F7 fine filter (1 pc.). Filtration rate PM2.5 > 70 %
FB Vento Expert A50		Remote control
FP Vento Expert A50 G3		G3 filters (2 pcs.)

Hoods

Name	Photo	Description
PP 160/0.5		The outer hood is designed to prevent the ingress of water and large objects into the ventilation equipment from outside