

VENTO Expert Duo A30-1 Pro

Heat recovery single-room units

- Air flow in heat recovery mode: 10
- Sound pressure level LpA at 1 m: 43
- Heat exchanger type: Reversible
- Sound-insulated casing
- Control: Remote Control, Built-in control panel
- Casing material: Plastic
- Humidity sensor: Optional
- CO2 sensor: Optional
- PM2.5 sensor: Optional

	Unit of measurement	VENTO Expert Duo A30-1 Pro		
Phases	-	1		
Maximum supply voltage	V	240		
Minimum supply voltage	V	100		
Power supply frequency	Hz	50/60		
Air flow in ventilation mode	m³/h	10		
Air flow in heat recovery mode	m³/h	10		
Sound pressure level LpA at 1 m	dB(A)	33	40	43
Heat recovery efficiency, max	%	85		
Heat exchanger type	-	Reversible		
Transported air temperature (max)	°C	40		
Transported air temperature (min)	°C	-15		
Ambient air temperature max	°C	40		
Ambient air temperature min	°C	1		
Ingress protection rating	-	IP24		
Ambient air humidity max	%	65		
Minimum wall thickness	mm	280		
Maximum wall thickness	mm	490		

Dimensions

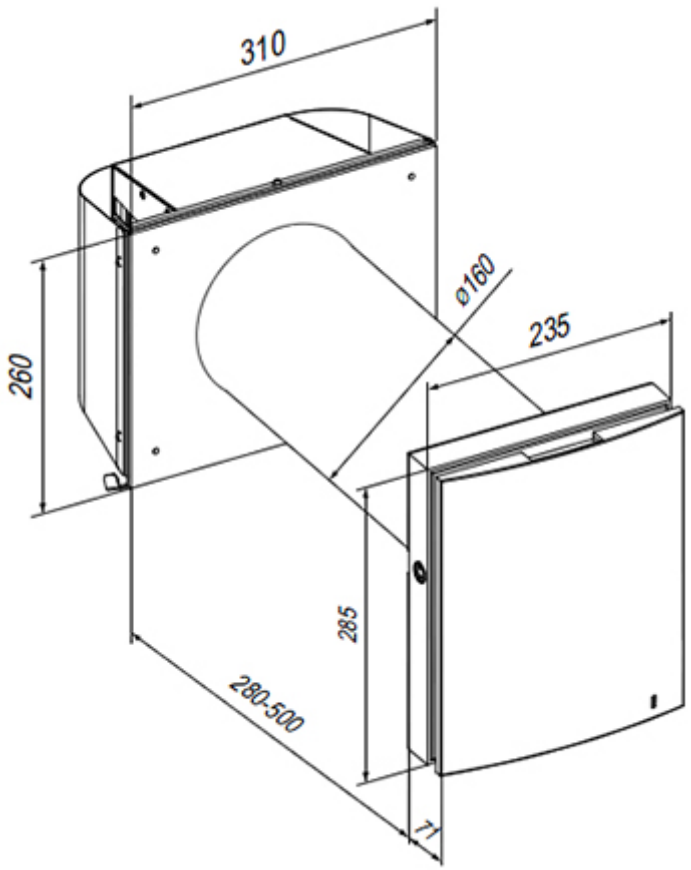

Accessories

CO2 sensors

Name	Photo	Description
CD-1		CO2 sensors
CD-2		CO2 sensors