

VENTO Expert A50-1 W

Heat recovery single-room units

- Air flow in heat recovery mode: 8
- Sound pressure level LpA at 1 m: 30
- Heat exchanger type: Reversible
- Sound-insulated casing
- Control: Remote Control, Smartphone, Built-in control panel
- Casing material: Plastic
- Humidity sensor: Optional
- CO2 sensor: Optional
- PM2.5 sensor: Optional

	Unit of measurement	VENTO Expert A50-1 W		
Phases	-	1		
Maximum supply voltage	V	240		
Minimum supply voltage	V	100		
Power supply frequency	Hz	50/60		
Air flow in ventilation mode	m³/h	15		
Air flow in heat recovery mode	m³/h	8		
Sound pressure level LpA at 1 m	dB(A)	20	27	30
Heat recovery efficiency, max	%	93		
Heat exchanger type	-	Reversible		
Transported air temperature (max)	°C	40		
Transported air temperature (min)	°C	-15		
Ambient air temperature min	°C	1		
Ambient air temperature max	°C	40		
Ingress protection rating	-	IP24		
Ambient air humidity max	%	65		

Dimensions

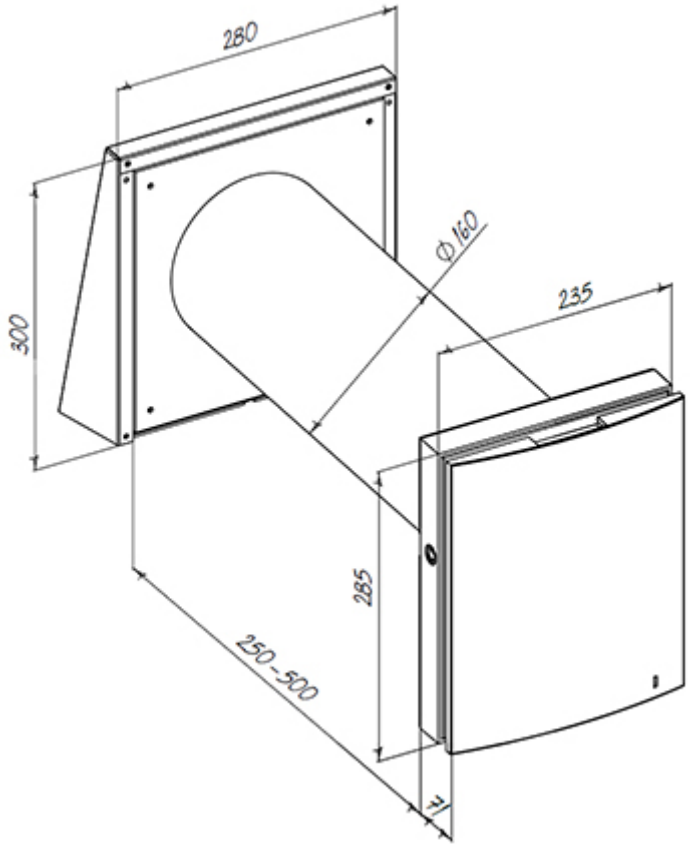
280
Ø160
235
300
285
250-500
71

Ecodesign

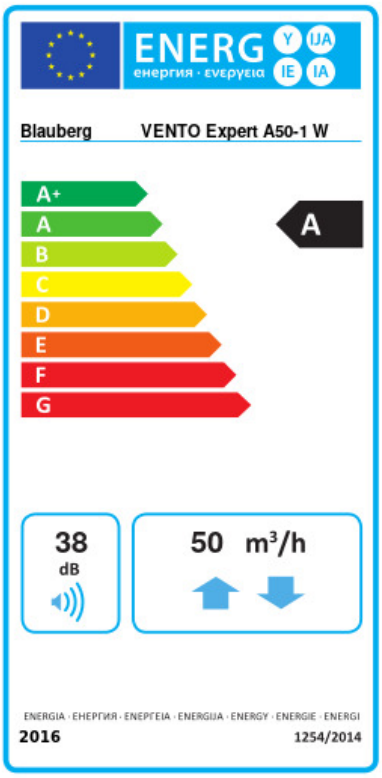

Trademark	Blauberg					
Model	VENTO Expert A50-1 W					
Specific energy consumption (SEC) (kWh/(m²/a))	Cold		Average		Warm	
	-83.2	A+	-41.3	A	-17.3	E
Type of ventilation unit	Bidirectional					
Type of drive installed	Variable speed					
Type of heat recovery system	Regenerative					
Thermal efficiency of heat recovery (%)	77					
Maximum flow rate (m³/h)	50					
Electric power input (W)	7.1					
Reference flow rate (m³/s)	0.008					
Specific power input (SPI) (W/(m³/h))	0.169					
Control typology	Local demand control					
Maximum internal leakage rates (%)	2.7					
Mixing rate (%)	1					
Airflow sensitivity at +20 Pa and -20 Pa (%)	0.2					
The indoor/outdoor air tightness (m³/h)	5.2					
Sound power level (dB(A))	38					
Declared typology	RVU BVU					
The annual electricity consumption (AEC) (kWh/a)	Cold		Average		Warm	
	99		99		99	
The annual heating saved (AHS) (kWh/a)	Cold		Average		Warm	
	86		44		20	

Accessories

CO2 sensors

Name	Photo	Description
CD-1		CO2 sensors
CD-2		CO2 sensors