

VENTO Expert A50-1 S W V.2

Single-room heat recovery units with Wi-Fi control

- Air flow in heat recovery mode: 25
- Sound pressure level LpA at 1 m: 30
- Heat exchanger material: Ceramic
- Sound-insulated casing
- Enthalpy heat exchanger
- Control: Smartphone
- Humidity sensor: Built-in
- Shutters

	Unit of measurement	VENTO Expert A50-1 S W V.2		
Maximum supply voltage	V	240		
Minimum supply voltage	V	100		
Power supply frequency	Hz	50/60		
Air flow in ventilation mode	m³/h	15	30	50
Air flow in heat recovery mode	m³/h	8	15	25
Sound pressure level LpA at 1 m	dB(A)	20	27	30
Heat recovery efficiency, max	%	93		
Heat exchanger material	-	Ceramic		
Transported air temperature (max)	°C	40		
Transported air temperature (min)	°C	-20		
Ambient air temperature min	°C	1		
Ambient air temperature max	°C	40		
Ingress protection rating	-	IP24		
Ambient air humidity max	%	80		
Minimum wall thickness	mm	255		
Maximum wall thickness	mm	490		

Dimensions

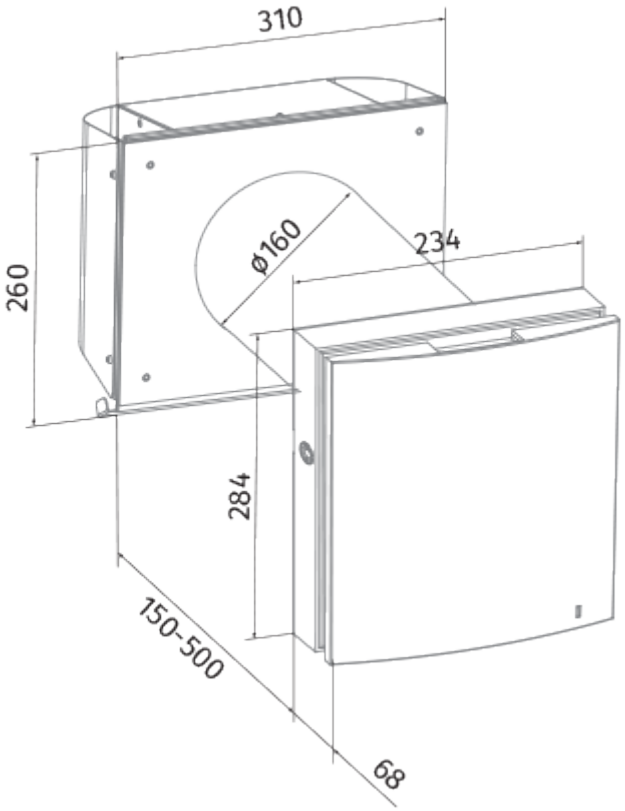
310
260
ø160
234
284
150-500
68

Ecodesign

Trademark	Blauberg					
Model	VENTO Expert A50-1 S W V.2					
Specific energy consumption (SEC) (kWh/(m²/a))	Cold		Average		Warm	
	-80.7	A+	-38.8	A	-14.9	E
Type of ventilation unit	Bidirectional					
Type of drive installed	Variable speed					
Type of heat recovery system	Regenerative					
Thermal efficiency of heat recovery (%)	77					
Maximum flow rate (m³/h)	25					
Electric power input (W)	7.1					
Reference flow rate (m³/s)	0.004					
Specific power input (SPI) (W/(m³/h))	0.339					
Control typology	Local demand control					
Maximum internal leakage rates (%)	2.7					
Mixing rate (%)	1					
Airflow sensitivity at +20 Pa and -20 Pa (%)	0.2					
The indoor/outdoor air tightness (m³/h)	5.2					
Declared typology	RVU BVU					
Sound power level (dB(A))	38					
The annual electricity consumption (AEC) (kWh/a)	Cold		Average		Warm	
	197		197		197	

Accessories

Control Panels

Name	Photo	Description
SE Vento Expert W		Control panel

CO2 sensors

Name	Photo	Description

CD-1		CO2 sensors
CD-2		CO2 sensors

Other accessories

Name	Photo	Description
R 160-500		Air duct 160 mm and polystyrene foam plug
R 160-700	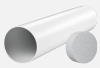	Air duct 160 mm and polystyrene foam plug
ZL1 Vento 160/150		
FPC 150x50 F7		Filter
FP2 Vento F7		Fine filter F7 Includes: • plastic filter holder (1 pc.) • F7 fine filter (1 pc.). Filtration rate PM2.5 > 70 %
FB Vento Expert A50		Remote control
FP Vento Expert A50 G3		G3 filters (2 pcs.)

Hoods

Name	Photo	Description
AH-S chrome 160		Stainless steel ventilation hood
AH-S white 160		Stainless steel ventilation hood
AH-10 beige 160		Plastic hoods decoration of supply and exhaust vents of public, residential and industrial ventilation systems
AH-10 black 160		Plastic hoods decoration of supply and exhaust vents of public, residential and industrial ventilation systems

AH-10 brown 160		Plastic hoods decoration of supply and exhaust vents of public, residential and industrial ventilation systems
AH-10 chrome 160		Plastic hoods decoration of supply and exhaust vents of public, residential and industrial ventilation systems
AH-10 grey 160		Plastic hoods decoration of supply and exhaust vents of public, residential and industrial ventilation systems
AH-10 terracotta 160		Plastic hoods decoration of supply and exhaust vents of public, residential and industrial ventilation systems
AH-10 white 160		Plastic hoods decoration of supply and exhaust vents of public, residential and industrial ventilation systems
AH-11 vintage 160		Plastic hoods decoration of supply and exhaust vents of public, residential and industrial ventilation systems
AH-11 black 160		Plastic hoods decoration of supply and exhaust vents of public, residential and industrial ventilation systems
AH-11 brown 160		Plastic hoods decoration of supply and exhaust vents of public, residential and industrial ventilation systems
AH-11 grey 160		Plastic hoods decoration of supply and exhaust vents of public, residential and industrial ventilation systems
AH-11 terracotta 160		Plastic hoods decoration of supply and exhaust vents of public, residential and industrial ventilation systems
AH-11 white 160		Plastic hoods decoration of supply and exhaust vents of public, residential and industrial ventilation systems
PP 160/0.5		The outer hood is designed to prevent the ingress of water and large objects into the ventilation equipment from outside
AH-8 white 160		Outer ventilation hood with frost protection for a cold climate
AH-8 chrome 160		Outer ventilation hood with frost protection for a cold climate

Plastic

Name	Photo	Description
KIT BlauPlast white 160		Kit for angular mounting (for walls with standard thickness)
KIT BlauPlast chrome 160		Kit for angular mounting (for walls with standard thickness)