

VENTO Expert A30 S10 W V.2

Single-room heat recovery unit with Wi-Fi control

- Air flow in heat recovery mode: 15
- Sound pressure level LpA at 1 m: 40
- Heat exchanger material: Ceramic
- Enthalpy heat exchanger
- Control: Smartphone
- Humidity sensor: Built-in
- Shutters

	Unit of measurement	VENTO Expert A30 S10 W V.2		
Phases	-	1		
Minimum supply voltage	V	100		
Maximum supply voltage	V	240		
Power supply frequency	Hz	50/60		
Air flow in ventilation mode	m³/h	10	20	30
Air flow in heat recovery mode	m³/h	5	10	15
Sound pressure level LpA at 1 m	dB(A)	30	37	40
Heat recovery efficiency, max	%	81		
Heat exchanger material	-	Ceramic		
Transported air temperature (max)	°C	40		
Transported air temperature (min)	°C	-15		
Ambient air temperature min	°C	1		
Ambient air temperature max	°C	40		
Ingress protection rating	-	IP24		
Ambient air humidity max	%	65		
Minimum wall thickness	mm	155		
Maximum wall thickness	mm	490		

Dimensions

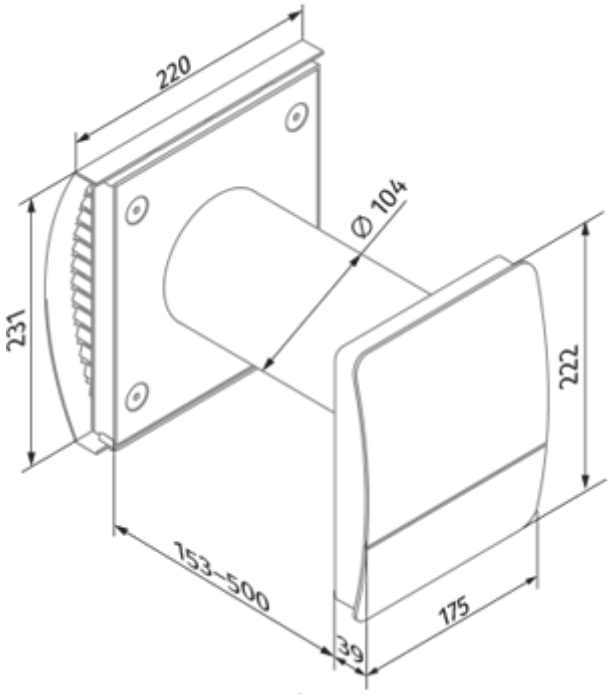

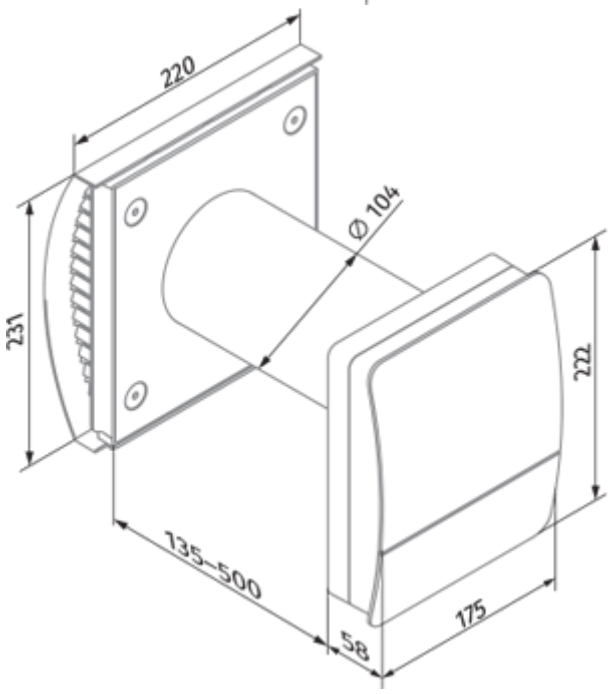

Ecodesign

Trademark	Blauberg					
Model	VENTO Expert A30 S10 W V.2					
Specific energy consumption (SEC) (kWh/(m²/a))	Cold		Average		Warm	
	-78.6	A+	-38	A	-14.8	E
Type of ventilation unit	Bidirectional					
Type of drive installed	Variable speed					
Type of heat recovery system	Regenerative					
Thermal efficiency of heat recovery (%)	71					
Maximum flow rate (m³/h)	15					
Electric power input (W)	4.4					
Reference flow rate (m³/s)	0.003					
Specific power input (SPI) (W/(m³/h))	0.3					
Control typology	Local demand control					
Maximum internal leakage rates (%)	2.7					
Mixing rate (%)	1					
Airflow sensitivity at +20 Pa and -20 Pa (%)	0.4					
The indoor/outdoor air tightness (m³/h)	0.5					
Declared typology	RVU BVU					
Sound power level (dB(A))	48					
The annual electricity consumption (AEC) (kWh/a)	Cold		Average		Warm	
	175		175		175	

Accessories

Control Panels

Name	Photo	Description
SE Vento Expert W		Control panel

CO2 sensors

Name	Photo	Description

CD-1		CO2 sensors
CD-2		CO2 sensors

Flat duct

Name	Photo	Description
BlauPlast RTR 100/0.5-1		Round telescopic duct
BlauPlast RTR 100/0.35-0.5		Round telescopic duct

Hoods

Name	Photo	Description
AH-10 beige 100		Plastic hoods decoration of supply and exhaust vents of public, residential and industrial ventilation systems
AH-10 black 100		Plastic hoods decoration of supply and exhaust vents of public, residential and industrial ventilation systems
AH-10 brown 100		Plastic hoods decoration of supply and exhaust vents of public, residential and industrial ventilation systems
AH-10 chrome 100		Plastic hoods decoration of supply and exhaust vents of public, residential and industrial ventilation systems
AH-10 grey 100		Plastic hoods decoration of supply and exhaust vents of public, residential and industrial ventilation systems
AH-10 terracotta 100		Plastic hoods decoration of supply and exhaust vents of public, residential and industrial ventilation systems
AH-10 white 100		Plastic hoods decoration of supply and exhaust vents of public, residential and industrial ventilation systems

Plastic

Name	Photo	Description

KIT BlauPlast white 100		Kit for angular mounting (for walls with standard thickness)
KIT BlauPlast chrome 100		Kit for angular mounting (for walls with standard thickness)

Other accessories

Name	Photo	Description
S Vento Expert A30		
FP3 Vento G3		G3 filter kit (2 pcs.)