

VENTO Expert A100-1 S W V.2

Single-room heat recovery units with Wi-Fi control

- Air flow in heat recovery mode: 54
- Sound pressure level LpA at 1 m: 51
- Heat exchanger type: Reversible
- Heat exchanger material: Ceramic
- Sound-insulated casing
- Enthalpy heat exchanger
- Control: Smartphone
- Humidity sensor: Built-in
- CO2 sensor: Optional
- PM2.5 sensor: Optional
- Temperature sensor: Optional
- Shutters

	Unit of measurement	VENTO Expert A100-1 S W V.2			
Maximum supply voltage	V	240			
Minimum supply voltage	V	100			
Power supply frequency	Hz	50/60			
Air flow in ventilation mode	m³/h	18	30	58	108
Air flow in heat recovery mode	m³/h	9	15	29	54
Sound pressure level LpA at 1 m	dB(A)	23	27	40	51
Heat recovery efficiency, max	%	87			
Heat exchanger type	-	Reversible			
Heat exchanger material	-	Ceramic			
Transported air temperature (max)	°C	40			
Transported air temperature (min)	°C	-20			
Ambient air temperature min	°C	1			
Ambient air temperature max	°C	40			
Ingress protection rating	-	IP24			
Ambient air humidity max	%	80			
Minimum wall thickness	mm	355			
Maximum wall thickness	mm	490			

Dimensions

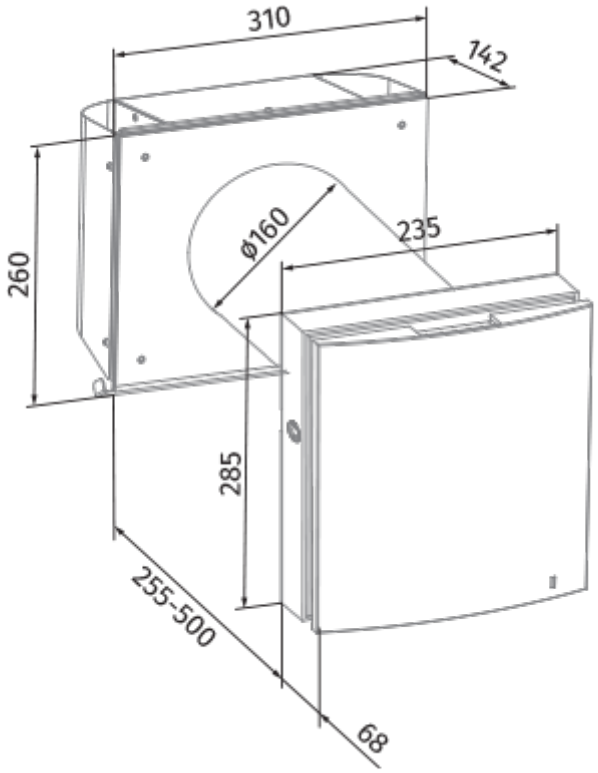

Ecodesign

Trademark	Blauberg					
Model	VENTO Expert A100-1 S W V.2					
Specific energy consumption (SEC) (kWh/(m²/a))	Cold		Average		Warm	
	-78.3	A+	-38.4	A	-15.6	E
Type of ventilation unit	Bidirectional					
Type of drive installed	Variable speed					
Type of heat recovery system	Regenerative					
Thermal efficiency of heat recovery (%)	68					
Maximum flow rate (m³/h)	54					
Electric power input (W)	18					
Reference flow rate (m³/s)	0.008					
Specific power input (SPI) (W/(m³/h))	0.228					
Control typology	Local demand control					
Maximum internal leakage rates (%)	2.7					
Mixing rate (%)	1					
Airflow sensitivity at +20 Pa and -20 Pa (%)	0.2					
The indoor/outdoor air tightness (m³/h)	5.2					
Declared typology	RVU BVU					
Sound power level (dB(A))	50					
The annual electricity consumption (AEC) (kWh/a)	Cold		Average		Warm	
	132		132		132	

Accessories

Control Panels

Name	Photo	Description
SE Vento Expert W		Control panel

CO2 sensors

Name	Photo	Description

CD-1		CO2 sensors
CD-2		CO2 sensors

Other accessories

Name	Photo	Description
R 160-500		Air duct 160 mm and polystyrene foam plug
R 160-700	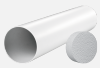	Air duct 160 mm and polystyrene foam plug
FB Vento Expert A50		Remote control

Hoods

Name	Photo	Description
AH-S chrome 160		Stainless steel ventilation hood
AH-10 beige 160		Plastic hoods decoration of supply and exhaust vents of public, residential and industrial ventilation systems
AH-10 black 160		Plastic hoods decoration of supply and exhaust vents of public, residential and industrial ventilation systems
AH-10 brown 160		Plastic hoods decoration of supply and exhaust vents of public, residential and industrial ventilation systems
AH-10 chrome 160		Plastic hoods decoration of supply and exhaust vents of public, residential and industrial ventilation systems
AH-10 grey 160		Plastic hoods decoration of supply and exhaust vents of public, residential and industrial ventilation systems
AH-10 terracotta 160		Plastic hoods decoration of supply and exhaust vents of public, residential and industrial ventilation systems

AH-10 white 160		Plastic hoods decoration of supply and exhaust vents of public, residential and industrial ventilation systems
AH-11 vintage 160		Plastic hoods decoration of supply and exhaust vents of public, residential and industrial ventilation systems
AH-11 black 160		Plastic hoods decoration of supply and exhaust vents of public, residential and industrial ventilation systems
AH-11 brown 160		Plastic hoods decoration of supply and exhaust vents of public, residential and industrial ventilation systems
AH-11 grey 160		Plastic hoods decoration of supply and exhaust vents of public, residential and industrial ventilation systems
AH-11 terracotta 160		Plastic hoods decoration of supply and exhaust vents of public, residential and industrial ventilation systems
AH-11 white 160		Plastic hoods decoration of supply and exhaust vents of public, residential and industrial ventilation systems
PP 160/0.5		The outer hood is designed to prevent the ingress of water and large objects into the ventilation equipment from outside
AH-S grey 160		Stainless steel ventilation hood

Plastic

Name	Photo	Description
KIT BlauPlast white 160		Kit for angular mounting (for walls with standard thickness)
KIT BlauPlast chrome 160		Kit for angular mounting (for walls with standard thickness)