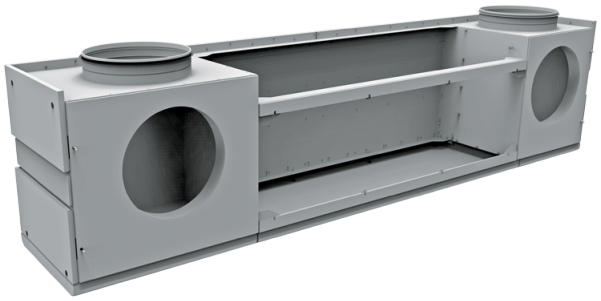

VDC Civic 1000 DB

Module of vertical duct connection

	Unit of measurement	VDC Civic 1000 DB

Dimensions