

Valeo-BPR 75/100 K T

High-pressure centrifugal fans in a plastic flush-mounted casing with main upward air discharge and additional right-hand air discharge

- Control: Wired control panel
- Casing material: Plastic
- Backdraft protection: Backdraft damper
- Motion sensor
- Humidity sensor: Built-in
- Timer: Built-in

	Unit of measurement	Valeo-BPR 75/100 K T	
Speed	-	1	2
Phases	-	1	
Maximum supply voltage	V	240	
Minimum supply voltage	V	220	
Power supply frequency	Hz	50	
Maximum airflow	m³/h	75	100
Weight	kg	2.7	
Ambient air temperature min	°C	1	
Ambient air temperature max	°C	40	
Ingress protection rating	-	IP55	

Dimensions

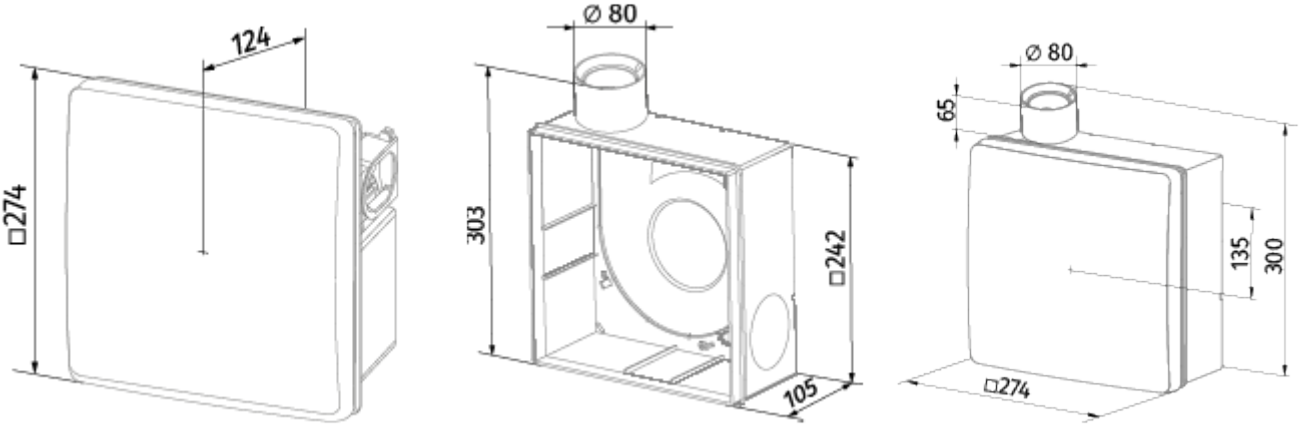

Accessories

Speed control switches

Name	Photo	Description
CDP-3/5		Multi-speed switch