

# Valeo-BPR 35/60 K H

High-pressure centrifugal fans in a plastic flush-mounted casing with main upward air discharge and additional right-hand air discharge

- Control: Wired control panel
- Casing material: Plastic
- Backdraft protection: Backdraft damper
- Humidity sensor: Built-in

| | Unit of measurement | Valeo-BPR 35/60 K H | |
|---|---|---|---|
| Speed | - | 1 | 2 |
| Phases | - | 1 | |
| Minimum supply voltage | V | 220 | |
| Maximum supply voltage | V | 240 | |
| Power supply frequency | Hz | 50 | |
| Maximum airflow | m³/h | 35 | 63 |
| Weight | kg | 2.7 | |
| Ambient air temperature min | °C | 1 | |
| Ambient air temperature max | °C | 40 | |
| Ingress protection rating | - | IP55 | |

## Dimensions

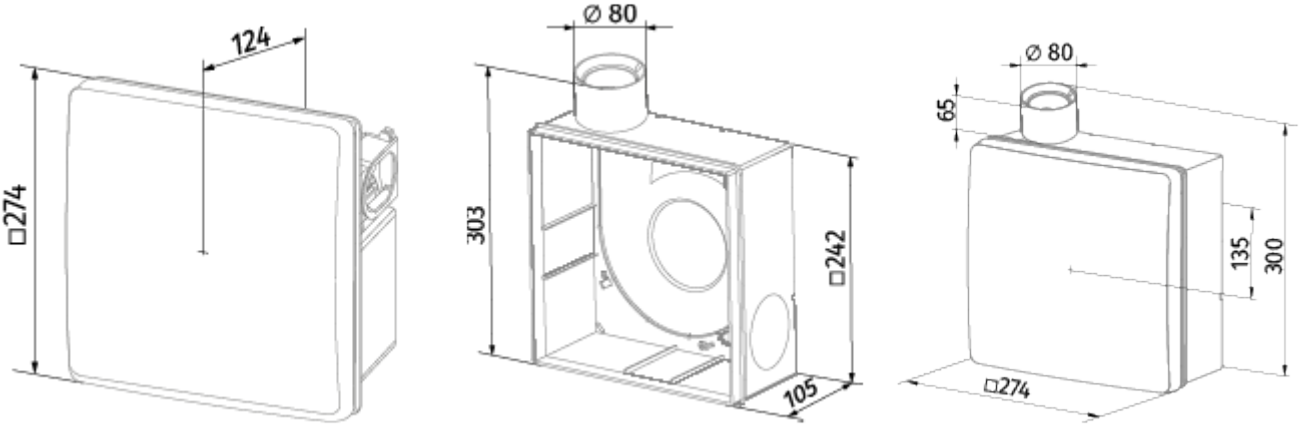


## Accessories

### Speed control switches

| Name | Photo | Description |
|---|---|---|
| CDP-3/5 |  | Multi-speed switch |