

Valeo-BP 75/100

High-pressure centrifugal fans in a plastic flush-mounted casing with upward air discharge

- Control: Wired control panel
- Casing material: Plastic
- Backdraft protection: Backdraft damper

	Unit of measurement	Valeo-BP 75/100	
Speed	-	1	2
Phases	-	1	
Maximum supply voltage	V	240	
Minimum supply voltage	V	220	
Power supply frequency	Hz	50	
Maximum airflow	m³/h	75	100
Weight	kg	2.7	
Ambient air temperature max	°C	40	
Ambient air temperature min	°C	1	
Ingress protection rating	-	IP55	

Dimensions

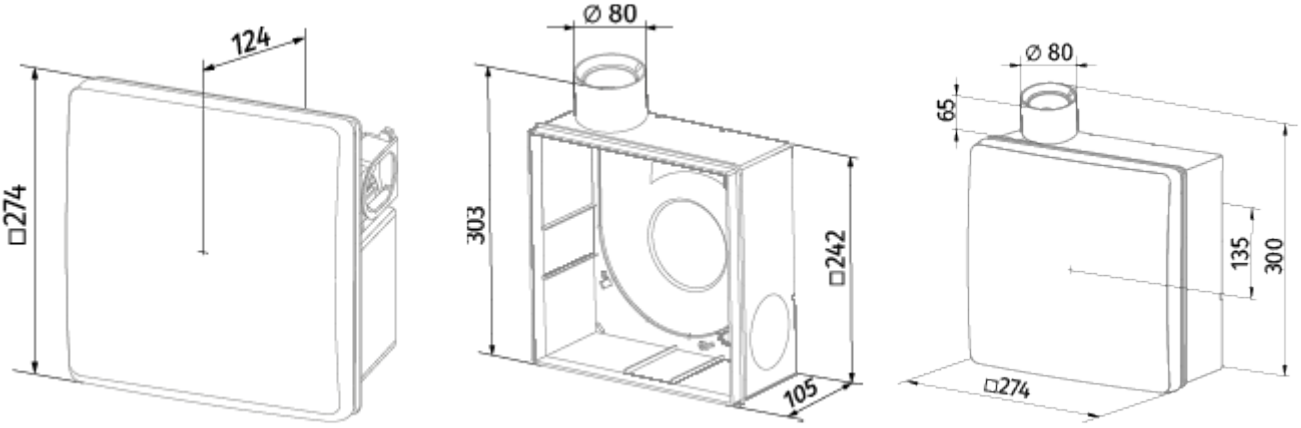
124
□274
Ø 80
303
□242
105
Ø 80
65
135
300
□274

Ecodesign

Trademark	Blauberg					
Model	Valeo-BP 75/100					
Specific energy consumption (SEC) (kWh/(m²/a))	Cold		Average		Warm	
	-21.4	D	-5	F	4.4	G
Type of ventilation unit	Unidirectional					
Type of drive installed	2-speed					
Type of heat recovery system	None					
Maximum flow rate (m³/h)	83					
Electric power input (W)	29					
Reference flow rate (m³/s)	0.019					
Reference pressure difference (Pa)	50					
Specific power input (SPI) (W/(m³/h))	0.388					
Control typology	Manual control					
Maximum external leakage rates (%)	2.7					
Sound power level (dB(A))	49					
Declared typology	RVU UVU					
The annual electricity consumption (AEC) (kWh/a)	Cold		Average		Warm	
	486		486		486	
The annual heating saved (AHS) (kWh/a)	Cold		Average		Warm	
	3355		1715		776	

Accessories

Speed control switches

Name	Photo	Description
CDP-3/5		Multi-speed switch