

Valeo-BF 35/60 H

High-pressure centrifugal fans in a fire-resistant (EI 60) flush-mounted casing with upward air discharge

- Control: Wired control panel
- Casing material: Plastic
- Backdraft protection: Backdraft damper
- Humidity sensor: Built-in

	Unit of measurement	Valeo-BF 35/60 H	
Speed	-	1	2
Phases	-	1	
Maximum supply voltage	V	240	
Minimum supply voltage	V	220	
Power supply frequency	Hz	50	
Maximum airflow	m³/h	35	63
Weight	kg	2.7	
Ambient air temperature min	°C	1	
Ambient air temperature max	°C	40	
Ingress protection rating	-	IP55	

Dimensions

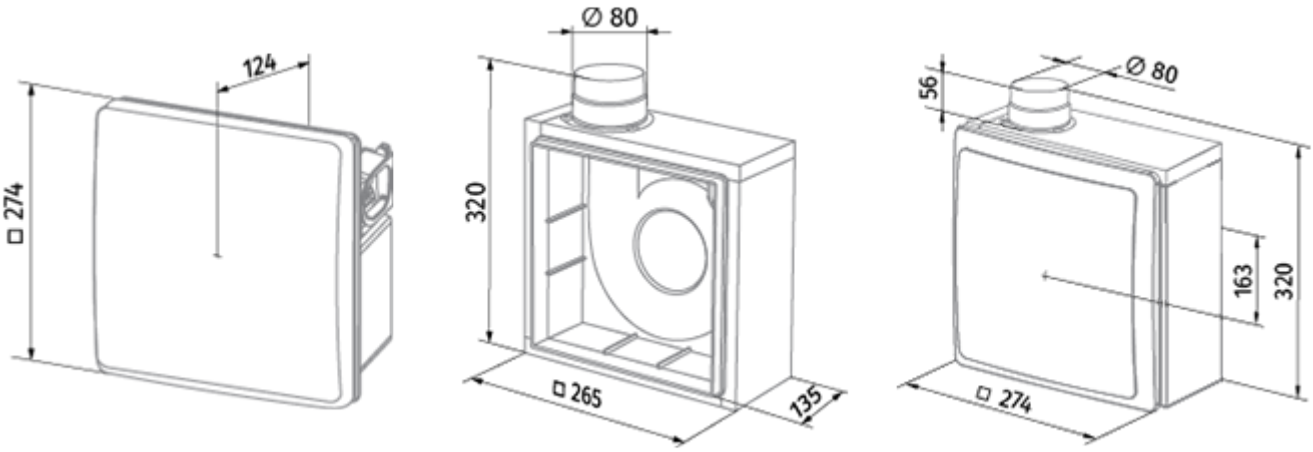
124
□ 274
Ø 80
320
□ 265
135
56
Ø 80
163
320
□ 274

Ecodesign

Trademark	Blauberg					
Model	Valeo-BF 35/60 H					
Specific energy consumption (SEC) (kWh/(m²/a))	Cold		Average		Warm	
	-47.4	A+	-20.3	D	-4.8	F
Type of ventilation unit	Unidirectional					
Type of drive installed	2-speed					
Type of heat recovery system	None					
Maximum flow rate (m³/h)	63					
Electric power input (W)	25					
Reference flow rate (m³/s)	0.01					
Reference pressure difference (Pa)	54					
Specific power input (SPI) (W/(m³/h))	0.429					
Control typology	Local demand control					
Maximum external leakage rates (%)	2.7					
Sound power level (dB(A))	47					
Declared typology	RVU UVU					
The annual electricity consumption (AEC) (kWh/a)	Cold		Average		Warm	
	320		320		320	
The annual heating saved (AHS) (kWh/a)	Cold		Average		Warm	
	5536		2830		1280	

Accessories

Speed control switches

Name	Photo	Description
CDP-3/5		Multi-speed switch