

Valeo 75/100 I

Fan units for exhaust ventilation/built-in fan modules

- Control: Wired control panel
- Casing material: Plastic
- Backdraft protection: Backdraft damper

	Unit of measurement	Valeo 75/100 I	
Speed	-	1	2
Phases	-	1	
Minimum supply voltage	V	220	
Maximum supply voltage	V	240	
Power supply frequency	Hz	50	
Maximum airflow	m³/h	75	100
Weight	kg	2.7	
Ambient air temperature min	°C	1	
Ambient air temperature max	°C	40	
Ingress protection rating	-	IP55	

Dimensions

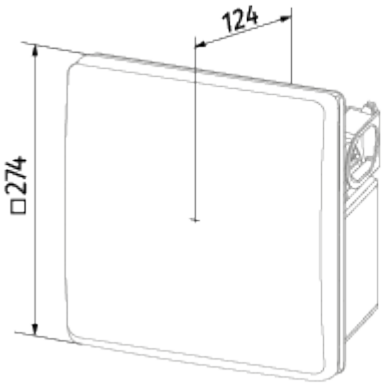
124
□274

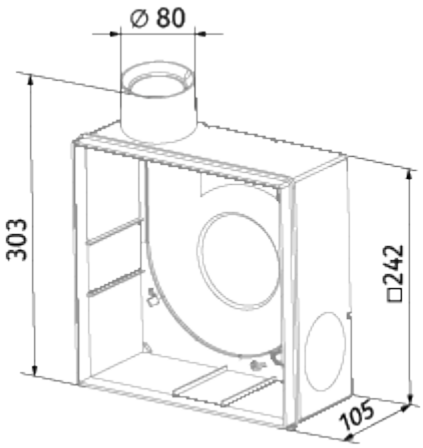
⌀ 80
303
□242
105

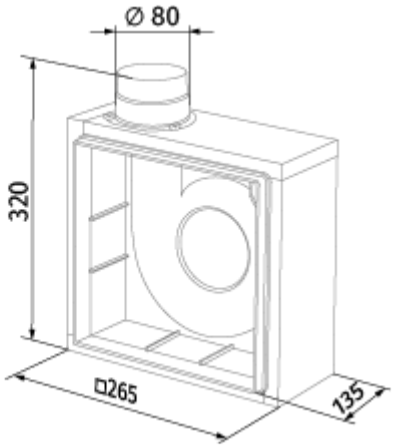
⌀ 80
320
□265
135

Ecodesign

Trademark	Blauberg					
Model	Valeo 75/100 I					
Specific energy consumption (SEC) (kWh/(m²/a))	Cold		Average		Warm	
	-25.2	C	-7.3	F	3	G
Type of ventilation unit	Unidirectional					
Type of drive installed	2-speed					
Type of heat recovery system	None					
Maximum flow rate (m³/h)	83					
Electric power input (W)	29					
Reference flow rate (m³/s)	0.019					
Reference pressure difference (Pa)	50					
Specific power input (SPI) (W/(m³/h))	0.388					
Control typology	Clock control					
Maximum external leakage rates (%)	2.7					
Declared typology	RVU UVU					
Sound power level (dB(A))	49					
The annual electricity consumption (AEC) (kWh/a)	Cold		Average		Warm	
	457		457		457	
The annual heating saved (AHS) (kWh/a)	Cold		Average		Warm	
	3667		1874		848	

Accessories

Speed control switches

Name	Photo	Description
CDP-3/5		Multi-speed switch