

# TwinBox EC 400

Duct mixed-type fans in sound-insulated casing

- Sound-insulated casing
- Impeller type: Mixed-flow
- Casing material: Galvanized steel

| | Unit of measurement | TwinBox EC 400 |
|---|---|---|
| Minimum supply voltage | V | 220 |
| Maximum supply voltage | V | 240 |
| Power supply frequency | Hz | 50/60 |
| Maximum airflow | m³/h | 4410 |
| Weight | kg | 129 |
| Transported air temperature (max) | °C | 55 |
| Transported air temperature (min) | °C | -25 |
| Ingress protection rating | - | IPX4 |
| Ingress protection rating of the drive | - | IP44 |

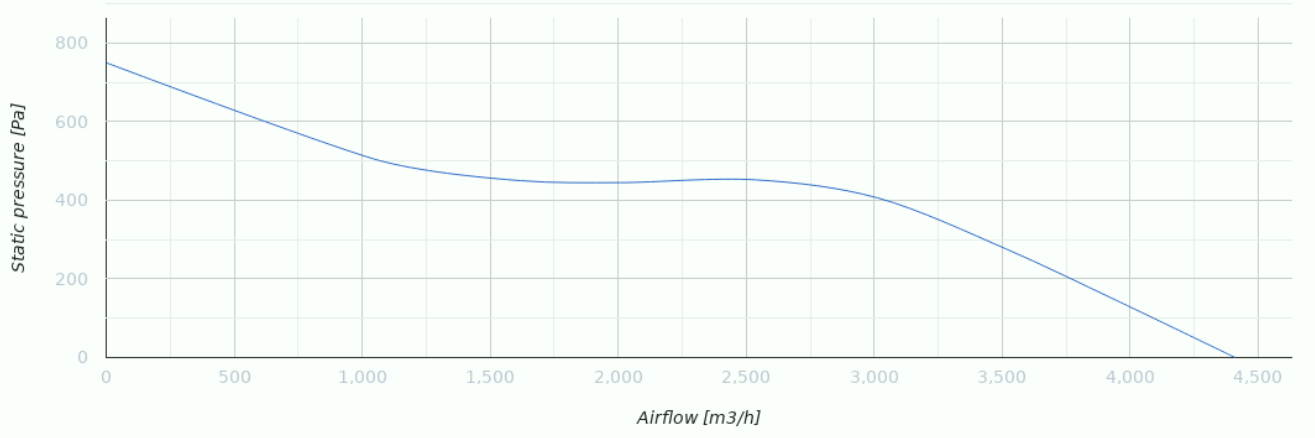

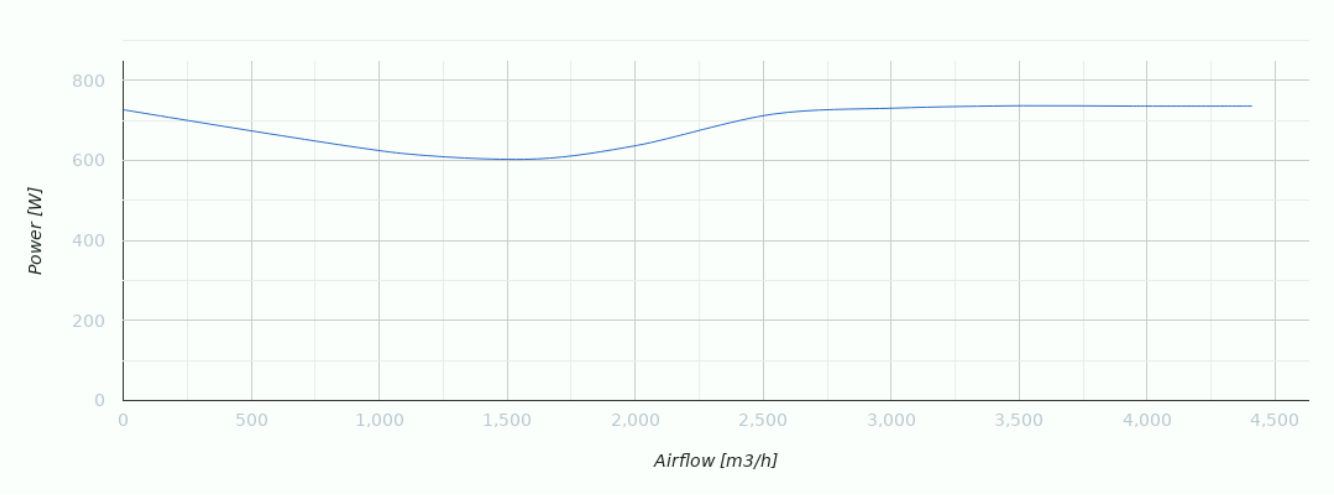


## Dimensions

| Ø D | L | L1 | H | W | W1 |
|---|---|---|---|---|---|
| 399 | 1358 | 1194 | 551 | 1182 | 1101 |

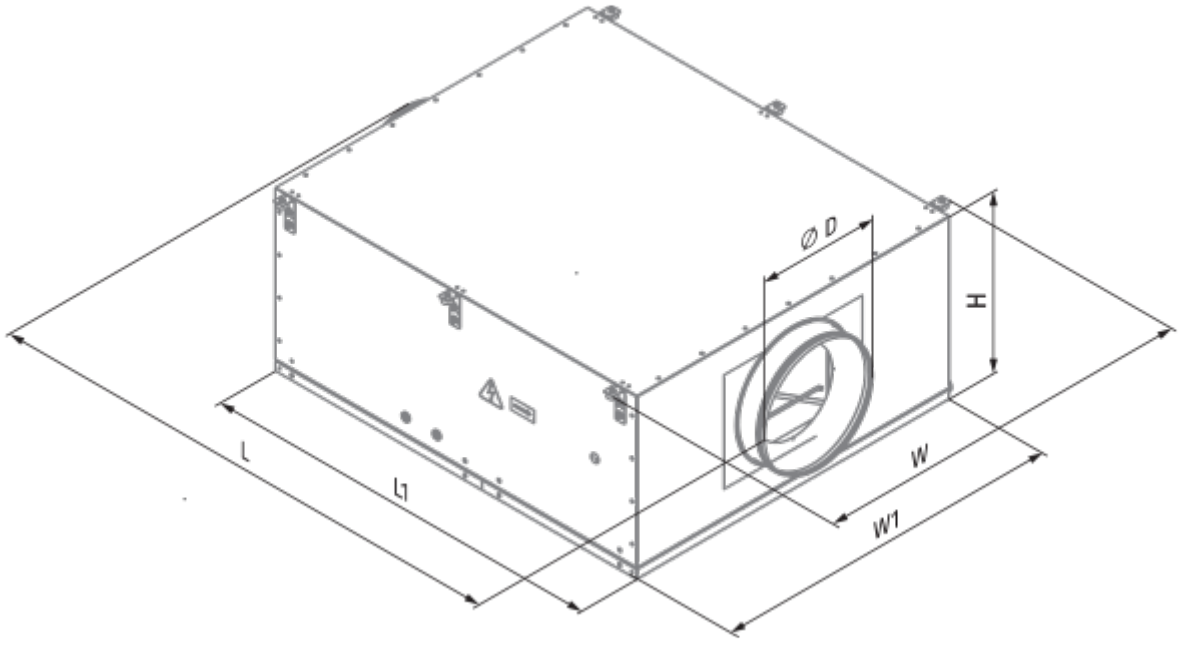

## Ecodesign

| | |
|---|---|
| Trademark | Blauberg |
| Model | TwinBox EC 400 |
| Type of drive installed | External MSD or VSD |
| Type of heat recovery system | None |
| Nominal external pressure (Pa) | 406 |
| Maximum external leakage rates (%) | 2.7 |
| Static efficiency (%) | 47.4 |
| Declared typology | NRVU UVU |
| Effective electric power input (kW) | 0.731 |
| Sound power level (dB(A)) | 80 |