

TwinBox EC 355

Duct mixed-type fans in sound-insulated casing

- Sound-insulated casing
- Impeller type: Mixed-flow
- Casing material: Galvanized steel

	Unit of measurement	TwinBox EC 355
Minimum supply voltage	V	220
Maximum supply voltage	V	240
Power supply frequency	Hz	50/60
Maximum airflow	m^3/h	3060
Weight	kg	97
Transported air temperature (max)	°C	55
Transported air temperature (min)	°C	-25
Ingress protection rating	-	IPX4
Ingress protection rating of the drive	-	IP44

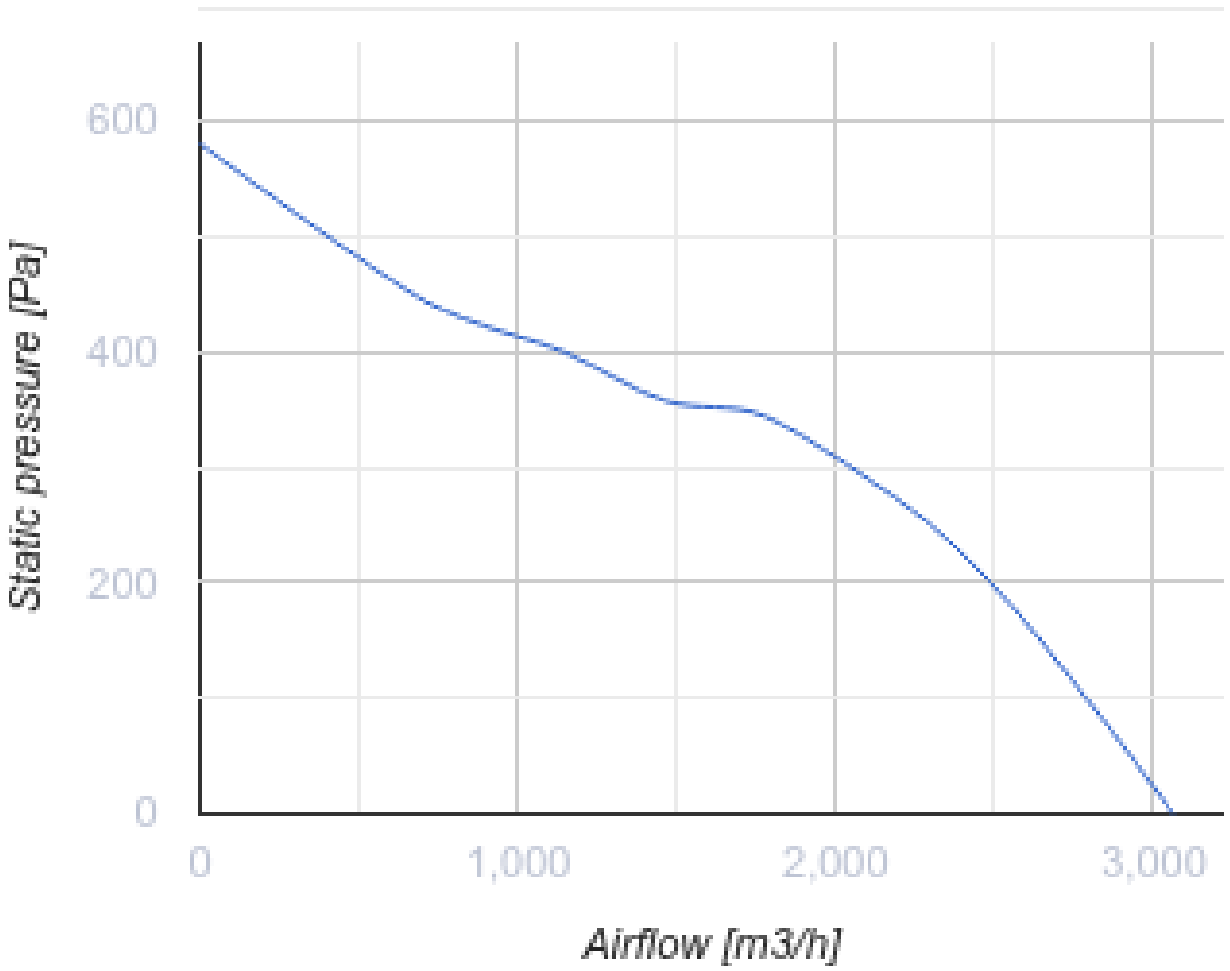
600
400
200
0
Static pressure [Pa]
0
1,000
2,000
3,000
Airflow [m3/h]

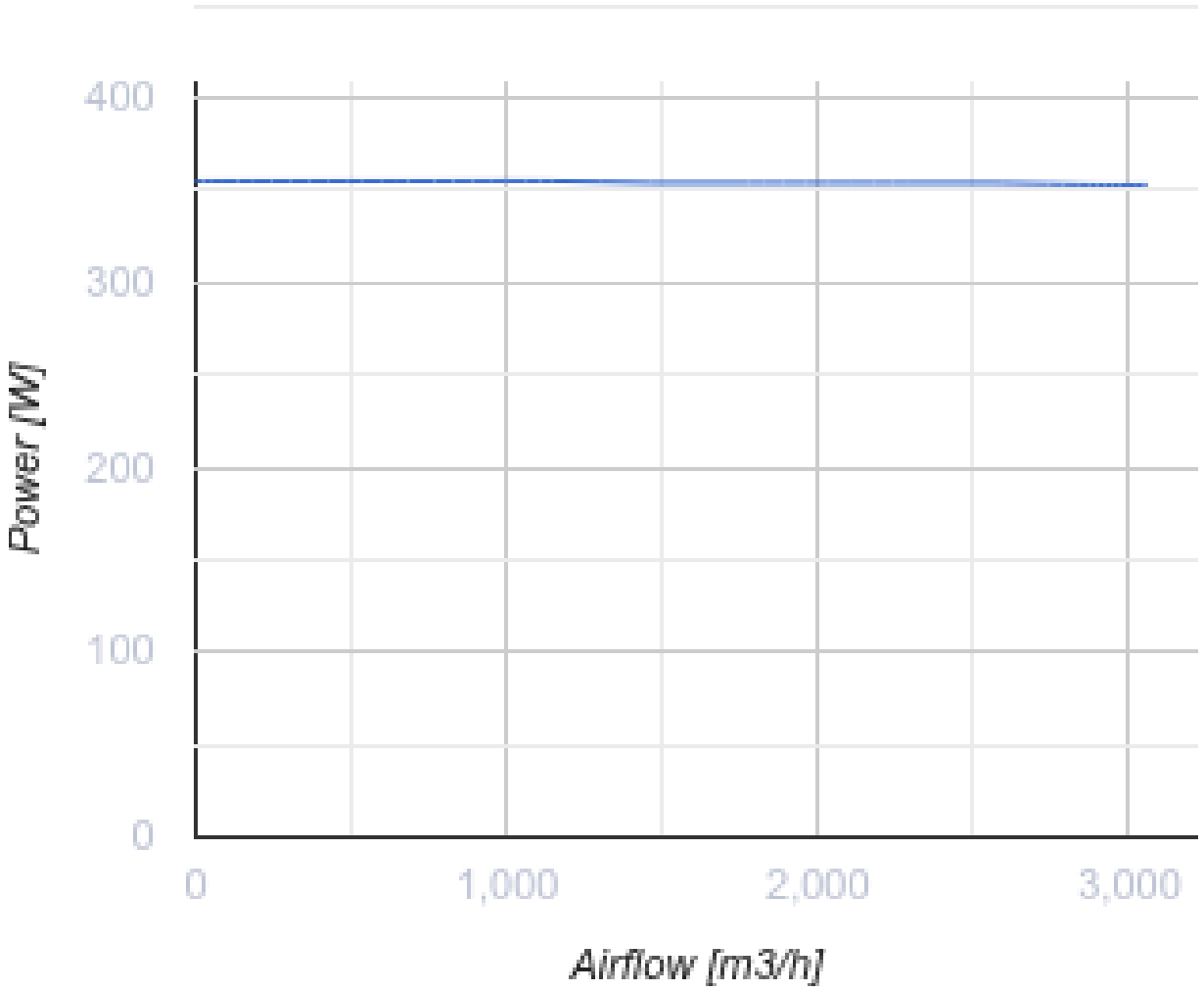

Dimensions

Ø D	L	L1	H	W	W1
354	1334	1170	520	1092	1010

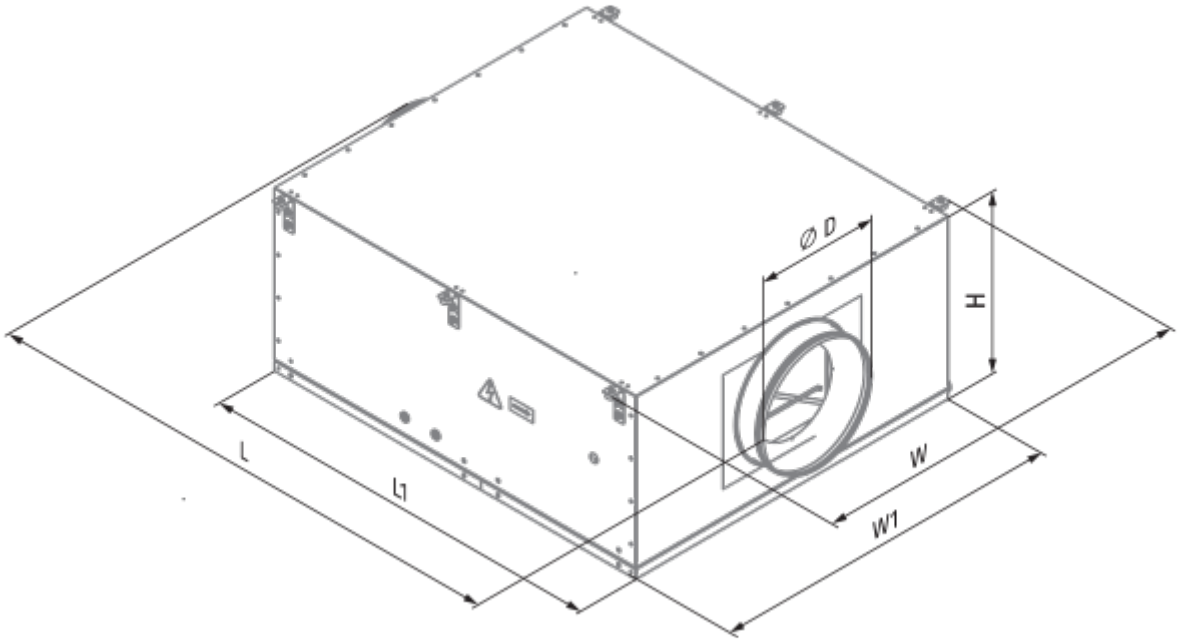
Ø D
H
L
L1
W
W1

Ecodesign

Trademark	Blauberg
Model	TwinBox EC 355
Type of drive installed	External MSD or VSD
Type of heat recovery system	None
Nominal external pressure (Pa)	254
Maximum external leakage rates (%)	2.7
Static efficiency (%)	46.4
Declared typology	NRVU UVU
Effective electric power input (kW)	0.354
Sound power level (dB(A))	65