

TwinBox EC 250

Duct mixed-type fans in sound-insulated casing

- Sound-insulated casing
- Impeller type: Mixed-flow
- Casing material: Galvanized steel

	Unit of measurement	TwinBox EC 250
Minimum supply voltage	V	220
Maximum supply voltage	V	240
Power supply frequency	Hz	50/60
Maximum airflow	m³/h	1390
Weight	kg	47
Transported air temperature (max)	°C	55
Transported air temperature (min)	°C	-25
Ingress protection rating	-	IPX4
Ingress protection rating of the drive	-	IP54

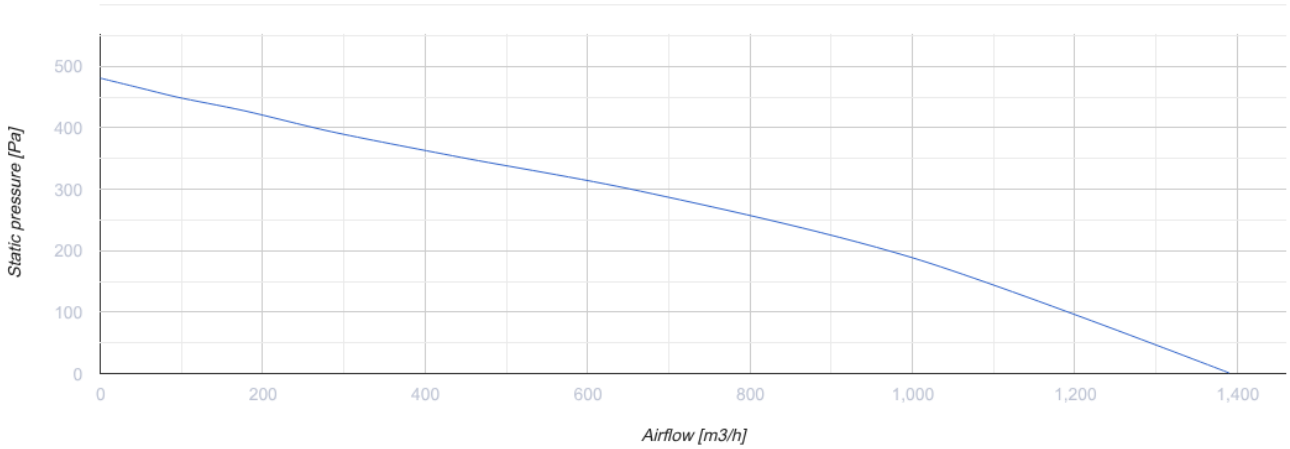

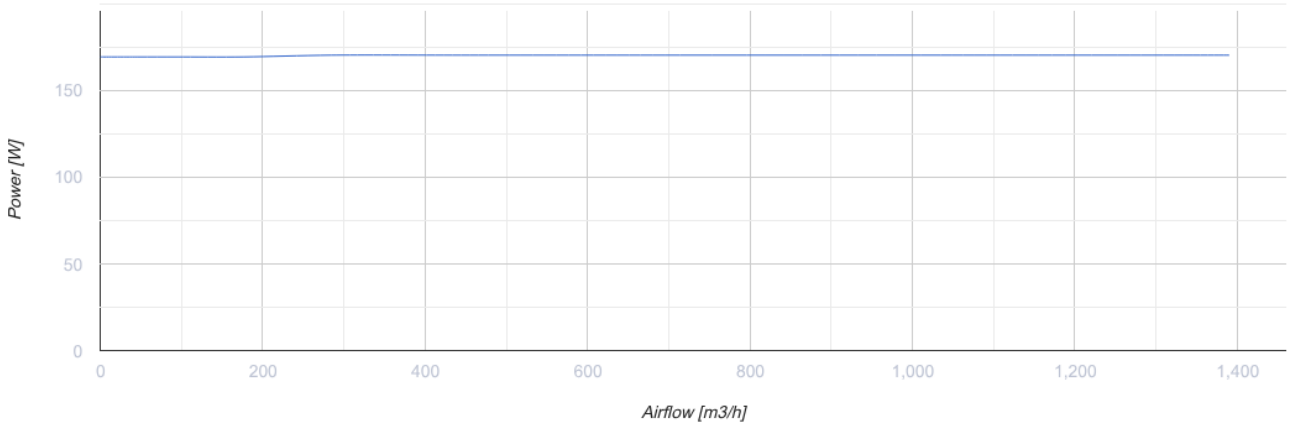

Dimensions

∅ D	L	L1	H	W	W1
249	1062	939	417	887	806

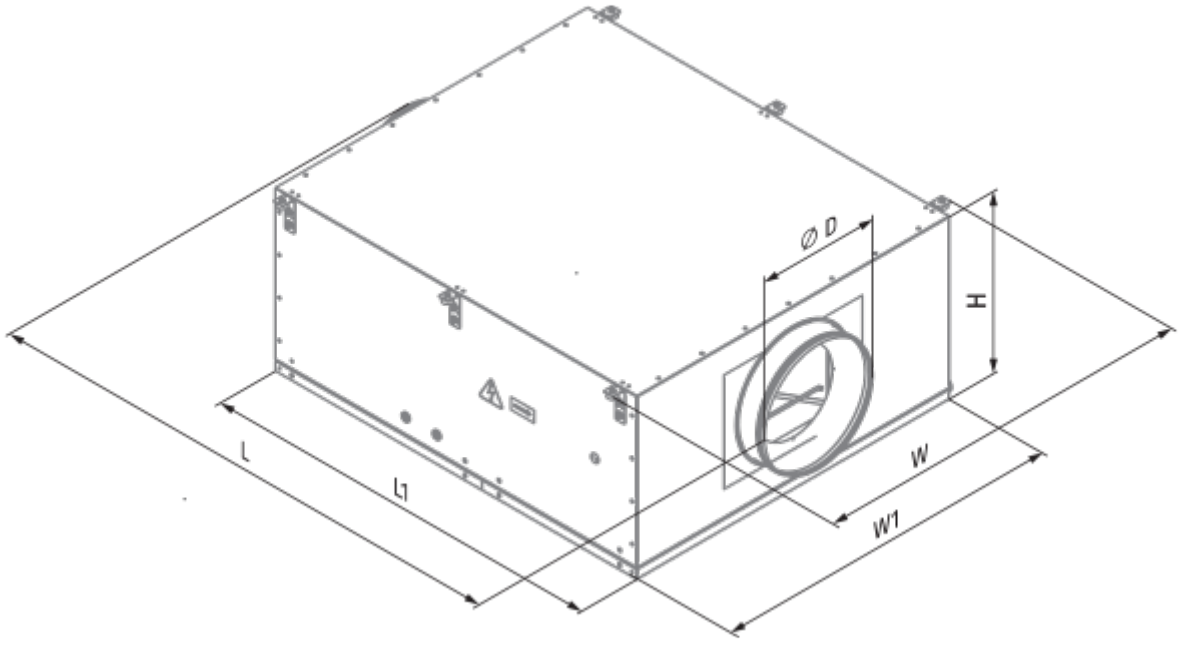

Ecodesign

Trademark	Blauberg
Model	TwinBox EC 250
Type of drive installed	External MSD or VSD
Type of heat recovery system	None
Nominal external pressure (Pa)	188
Maximum external leakage rates (%)	2.7
Static efficiency (%)	47.4
Declared typology	NRVU UVU
Effective electric power input (kW)	0.17
Sound power level (dB(A))	64