

TwinBox EC 200

Duct mixed-type fans in sound-insulated casing

- Sound-insulated casing
- Impeller type: Mixed-flow
- Casing material: Galvanized steel

	Unit of measurement	TwinBox EC 200
Minimum supply voltage	V	220
Maximum supply voltage	V	240
Power supply frequency	Hz	50/60
Maximum airflow	m³/h	910
Weight	kg	39
Transported air temperature (max)	°C	55
Transported air temperature (min)	°C	-25
Ingress protection rating	-	IPX4
Ingress protection rating of the drive	-	IP44

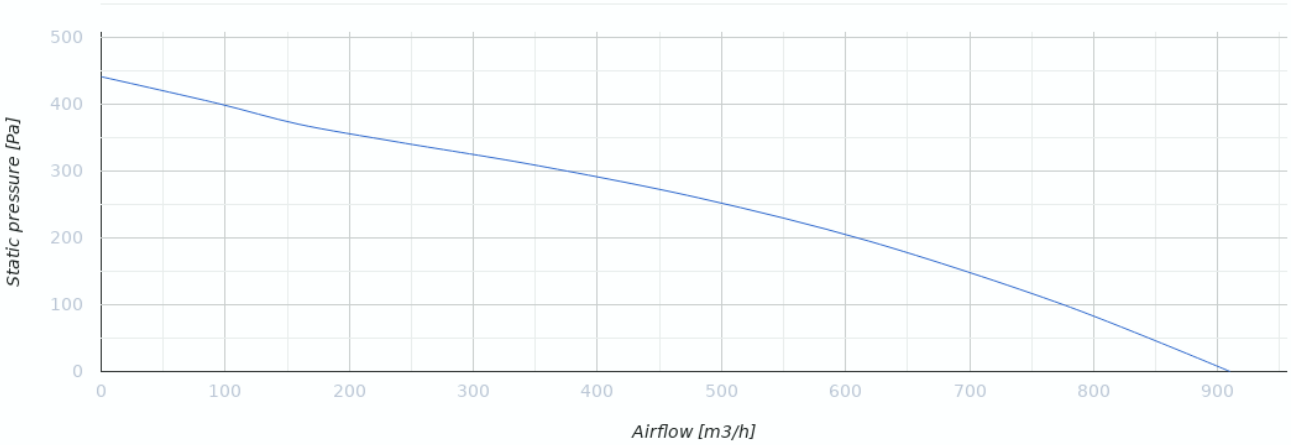

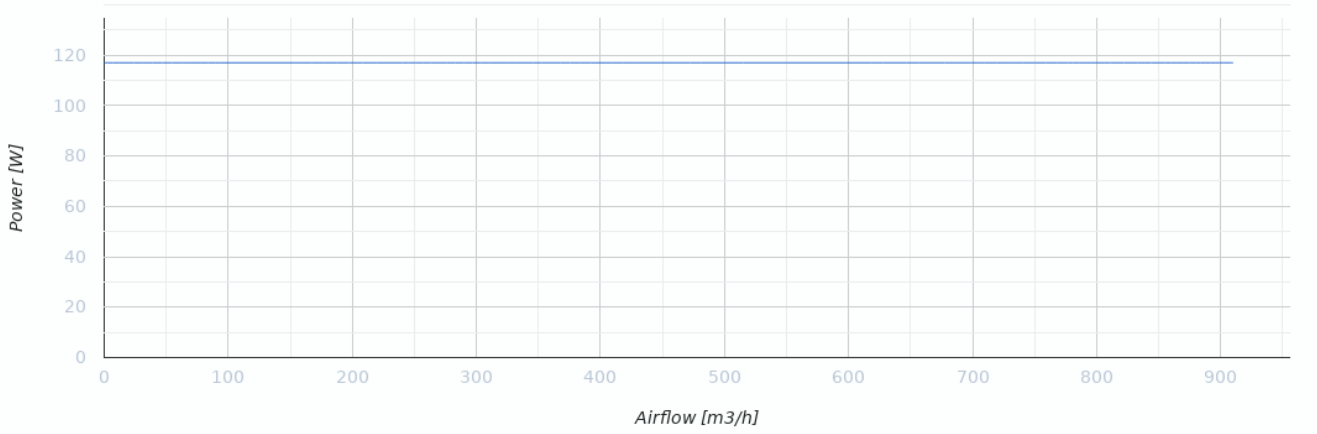

Dimensions

∅ D	L	L1	H	W	W1
199	975	850	375	791	710

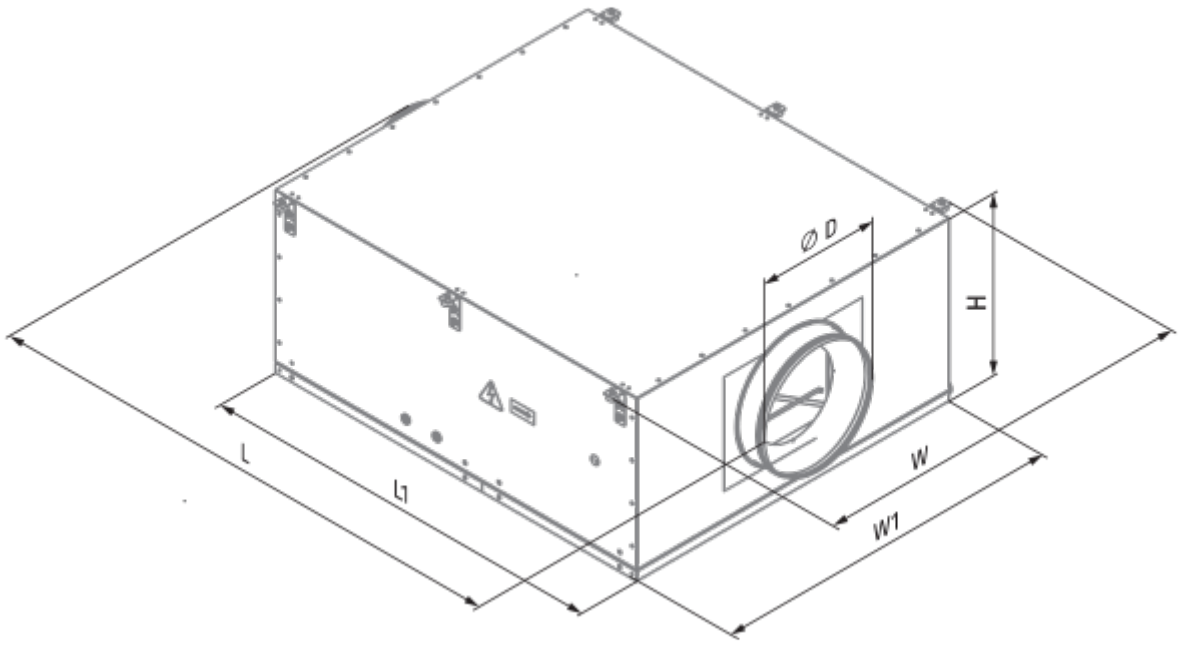

Ecodesign

Trademark	Blauberg
Model	TwinBox EC 200
Type of drive installed	External MSD or VSD
Type of heat recovery system	None
Nominal external pressure (Pa)	260
Maximum external leakage rates (%)	2.7
Static efficiency (%)	30.3
Declared typology	NRVU UVU
Effective electric power input (kW)	0.117
Sound power level (dB(A))	57