

Turbo EC 200 GI1

Mixed-flow inline fans with EC-motors

- Control: Built-in speed controller
- Impeller type: Mixed-flow
- Casing material: Polypropylene
- Installation in any position
- Cable with mains plug
- Temperature sensor: Built-in

	Unit of measurement	Turbo EC 200 GI1
Phases	-	1
Minimum supply voltage	V	230
Maximum supply voltage	V	230
Power supply frequency	Hz	50/60
Maximum airflow	m^3/h	1040
Weight	kg	3.95
Transported air temperature (max)	°C	55
Transported air temperature (min)	°C	-25
Ingress protection rating	-	IPX4
Impeller material	-	Plastic

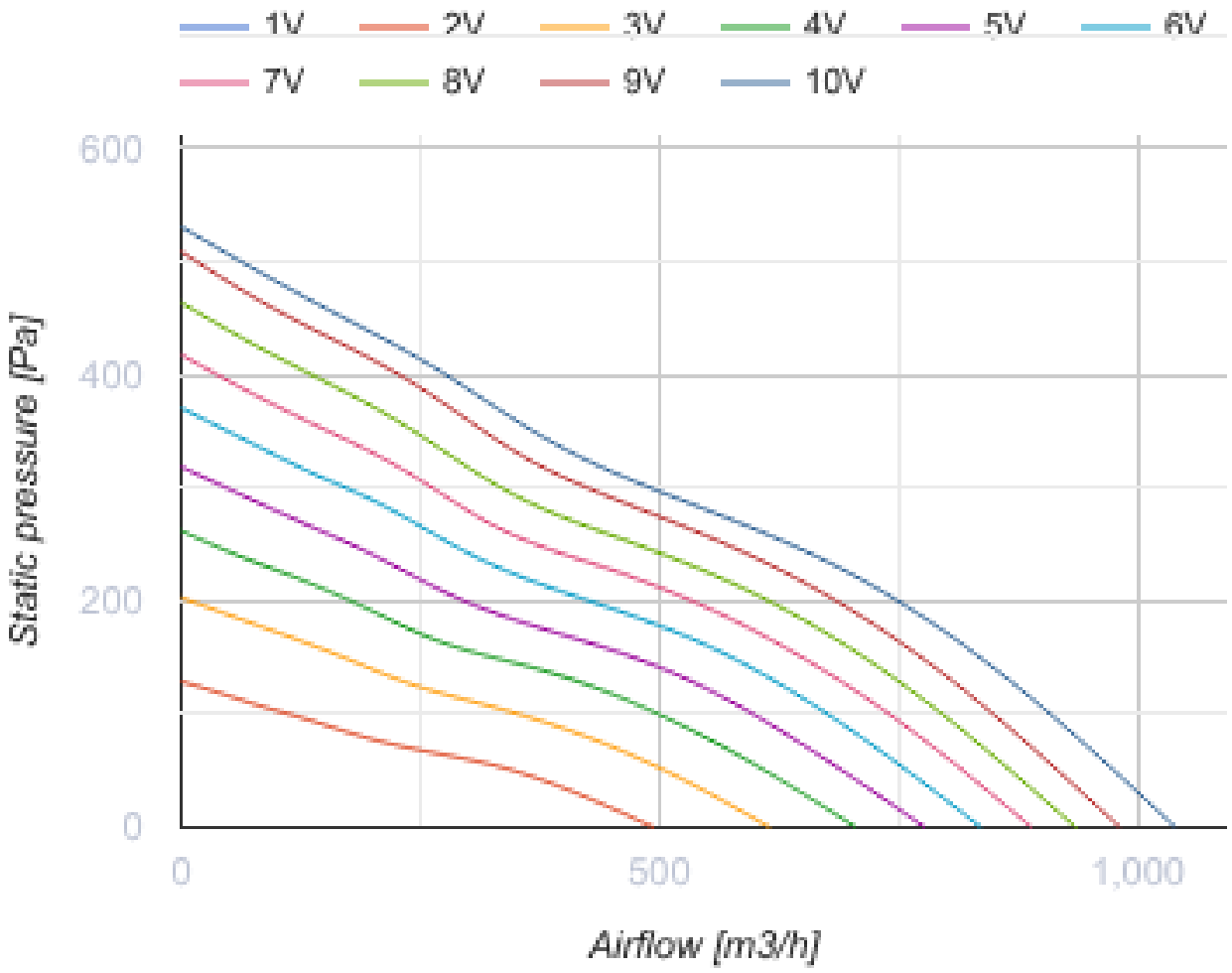
1V
2V
3V
4V
5V
6V
7V
8V
9V
10V
600
400
200
0
Static pressure [Pa]
0
500
1,000
Airflow [m3/h]

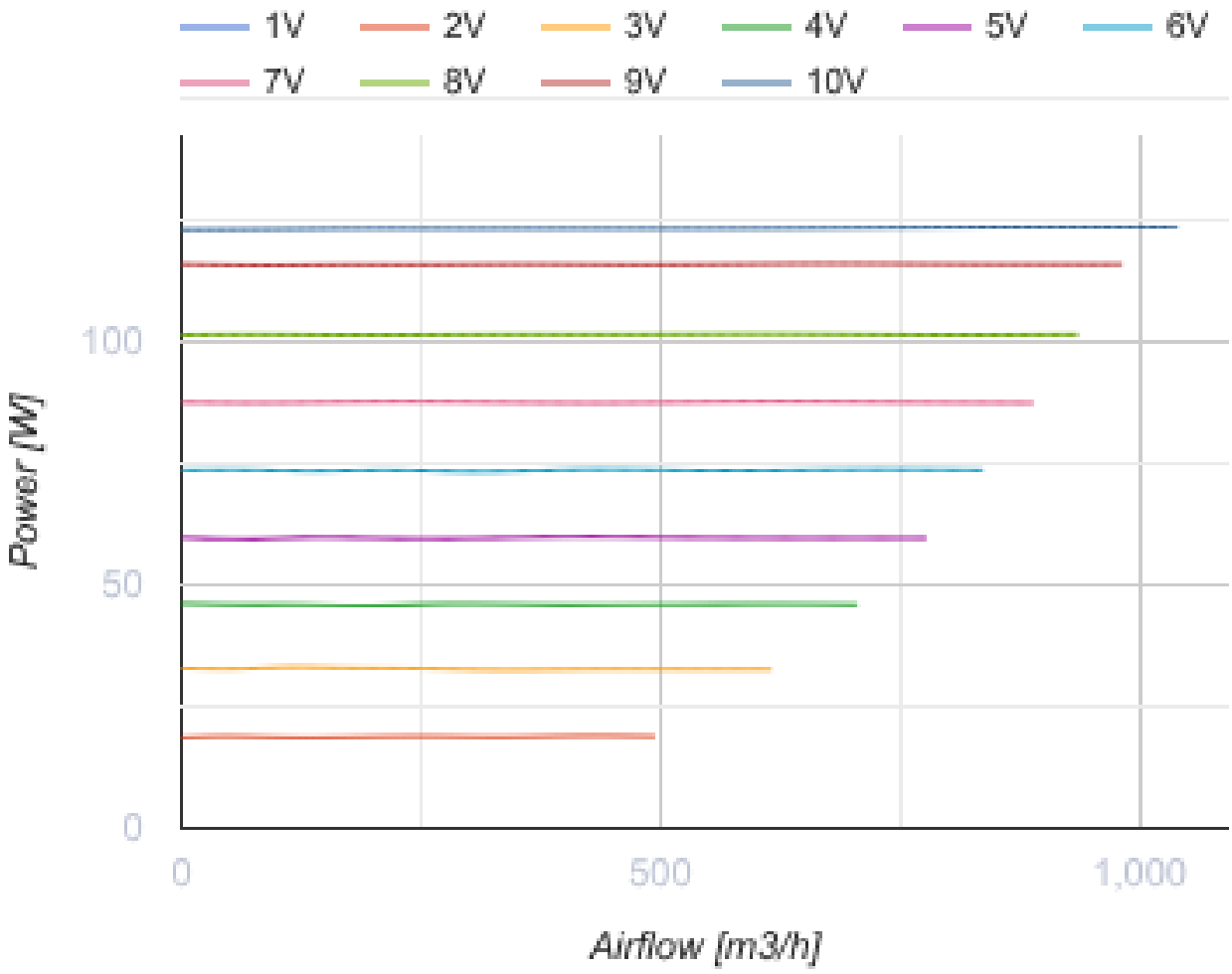

Dimensions

Ø D	Ø D1	B	H	L
198	209	239	277.5	295.5

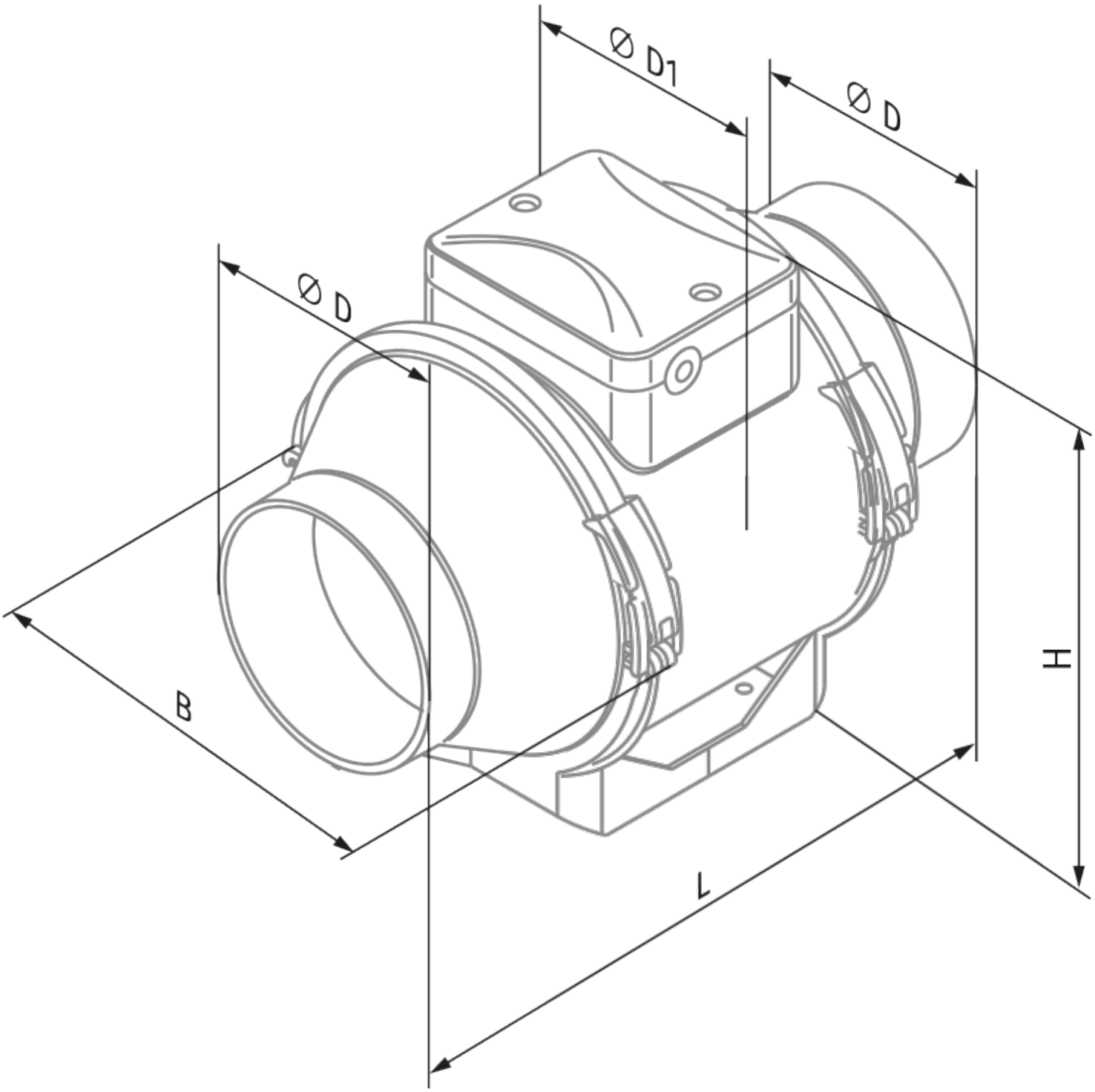
Ø D1
Ø D
Ø D
B
H
L

Ecodesign

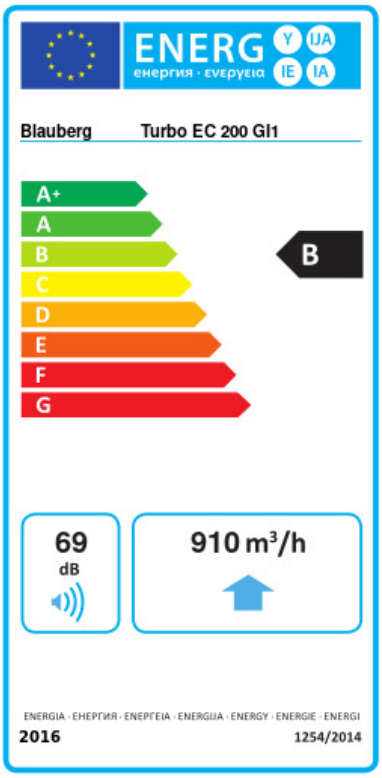

Trademark	Blauberg					
Model	Turbo EC 200 GI1					
Specific energy consumption (SEC) (kWh/(m²/a))	Cold		Average		Warm	
	-54.1	A+	-27.1	B	-11.6	E
Type of ventilation unit	Unidirectional					
Type of drive installed	Variable speed					
Type of heat recovery system	None					
Maximum flow rate (m³/h)	910					
Electric power input (W)	123					
Reference flow rate (m³/s)	0.177					
Reference pressure difference (Pa)	50					
Specific power input (SPI) (W/(m³/h))	0.094					
Control typology	Local demand control					
Maximum external leakage rates (%)	2.7					
Declared typology	RVU UVU					
Sound power level (dB(A))	69					
The annual electricity consumption (AEC) (kWh/a)	Cold		Average		Warm	
	50		50		50	
The annual heating saved (AHS) (kWh/a)	Cold		Average		Warm	
	5536		2830		1280	

Accessories

For round ducts

Name	Photo	Description
SD 200/600		Silencers for round ducts
SD 200/900		Silencers for round ducts
SD 200/1200		Silencers for round ducts

For round ducts

Name	Photo	Description
KFBK 200		Filter boxes for round ducts
KFBT 200 G4	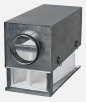	Filter boxes with pocket filters for round ducts
KFBT 200 F5		Filter boxes with pocket filters for round ducts
KFBT 200 F7		Filter boxes with pocket filters for round ducts

For round ducts

Name	Photo	Description
VRV 200		Backdraft dampers with spring for round ducts
VKA 200		Air dampers for round ducts

Water heaters

Name	Photo	Description
WKH 200-2		Duct water heaters for round ducts
WKH 200-4		Duct water heaters for round ducts

Electrical heaters

Name	Photo	Description
EKH 200-1.2		Duct electrical heaters for round ducts
EKH 200-1.7		Duct electrical heaters for round ducts

EKH 200-2.0		Duct electrical heaters for round ducts
EKH 200-2.4		Duct electrical heaters for round ducts
EKH 200-3.4		Duct electrical heaters for round ducts
EKH 200-3.6		Duct electrical heaters for round ducts
EKH 200-5.1		Duct electrical heaters for round ducts
EKH 200-6.0		Duct electrical heaters for round ducts

EC motors regulators

Name	Photo	Description
CDT E/0-10		Speed control for EC motors

Fittings

Name	Photo	Description
K 200		Clamp for round flexible ducts
K 200 Zn		Clamp for round flexible ducts