

# Turbo EC 125 eco T

Inline mixed-flow fans

- Impeller type: Mixed-flow
- Casing material: Plastic
- Installation in any position
- Timer: Turn off timer

| | Unit of measurement | Turbo EC 125 eco T | |
|---|---|---|---|
| Phases | - | 1 | |
| Maximum supply voltage | V | 230 | |
| Minimum supply voltage | V | 230 | |
| Power supply frequency | Hz | 50/60 | |
| Maximum airflow | m³/h | 228 | 275 |
| Weight | kg | 1.79 | |
| Transported air temperature (max) | °C | 40 | |
| Transported air temperature (min) | °C | -25 | |
| Ingress protection rating | - | IPX4 | |
| Ingress protection rating of the drive | - | IPX4 | |
| Impeller material | - | Plastic | |

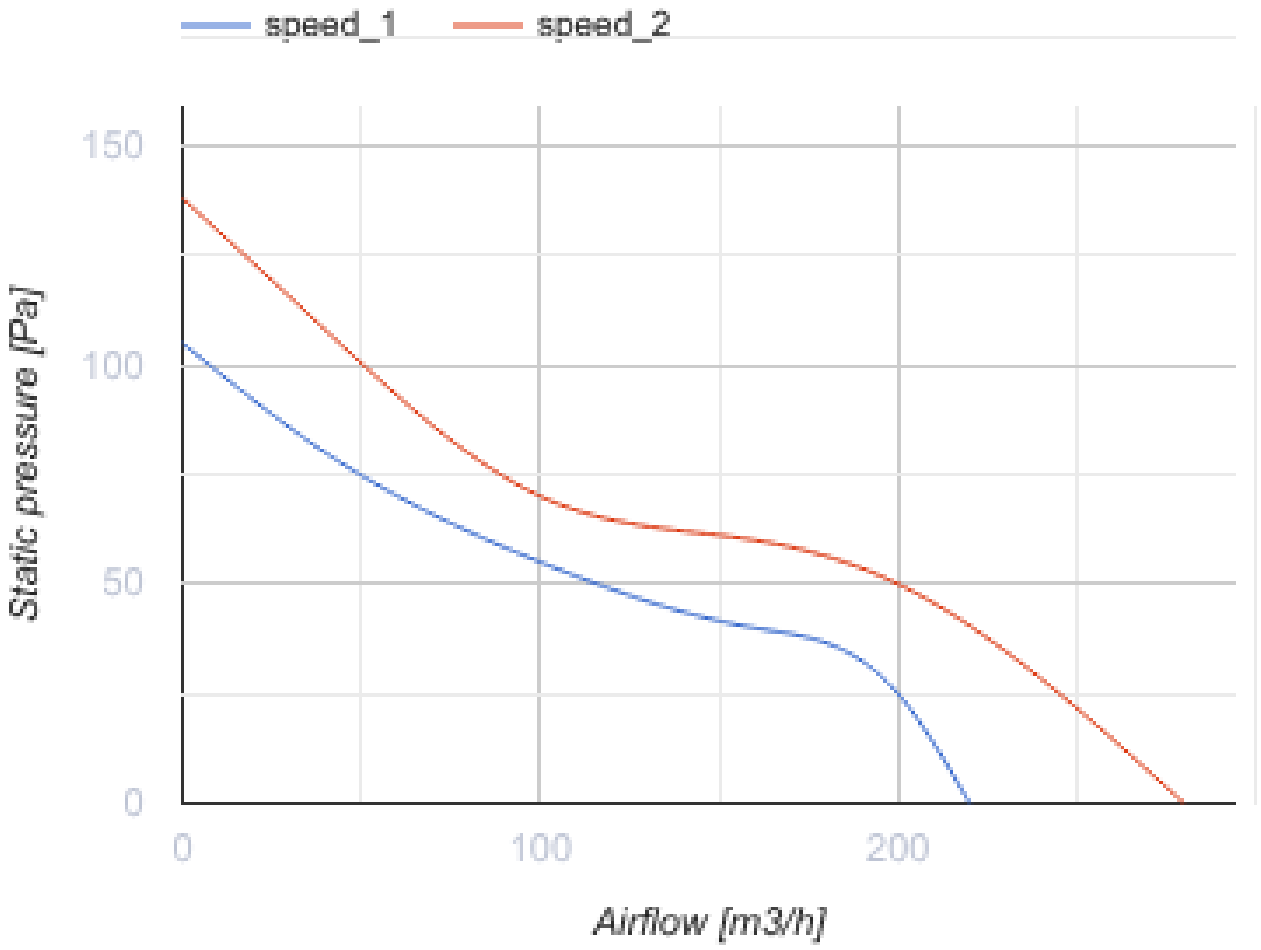
speed_1
speed_2
150
100
50
0
Static pressure [Pa]
0
100
200
Airflow [m3/h]

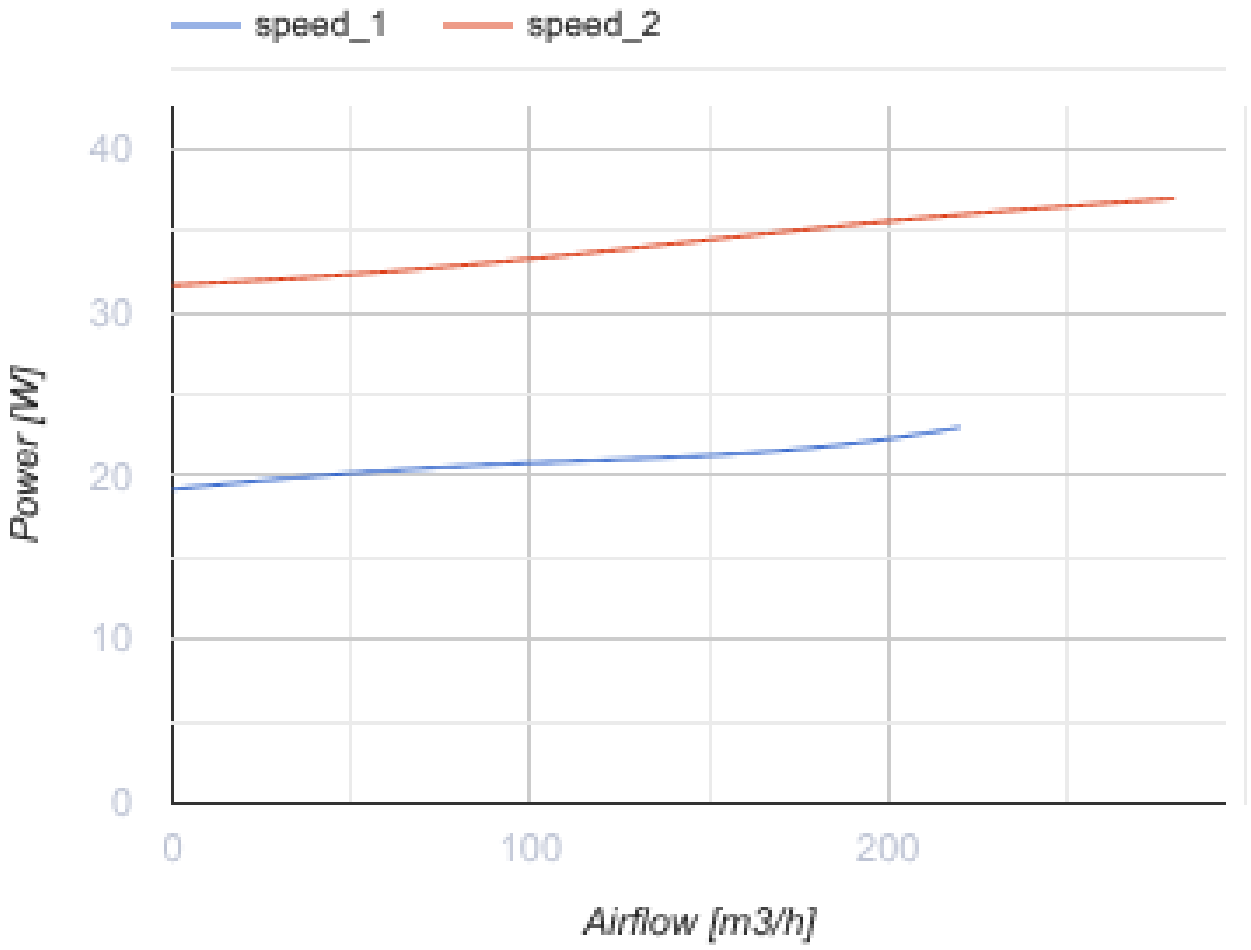


## Dimensions

| Ø D | B | H | L |
|---|---|---|---|
| 123 | 167 | 190 | 246 |

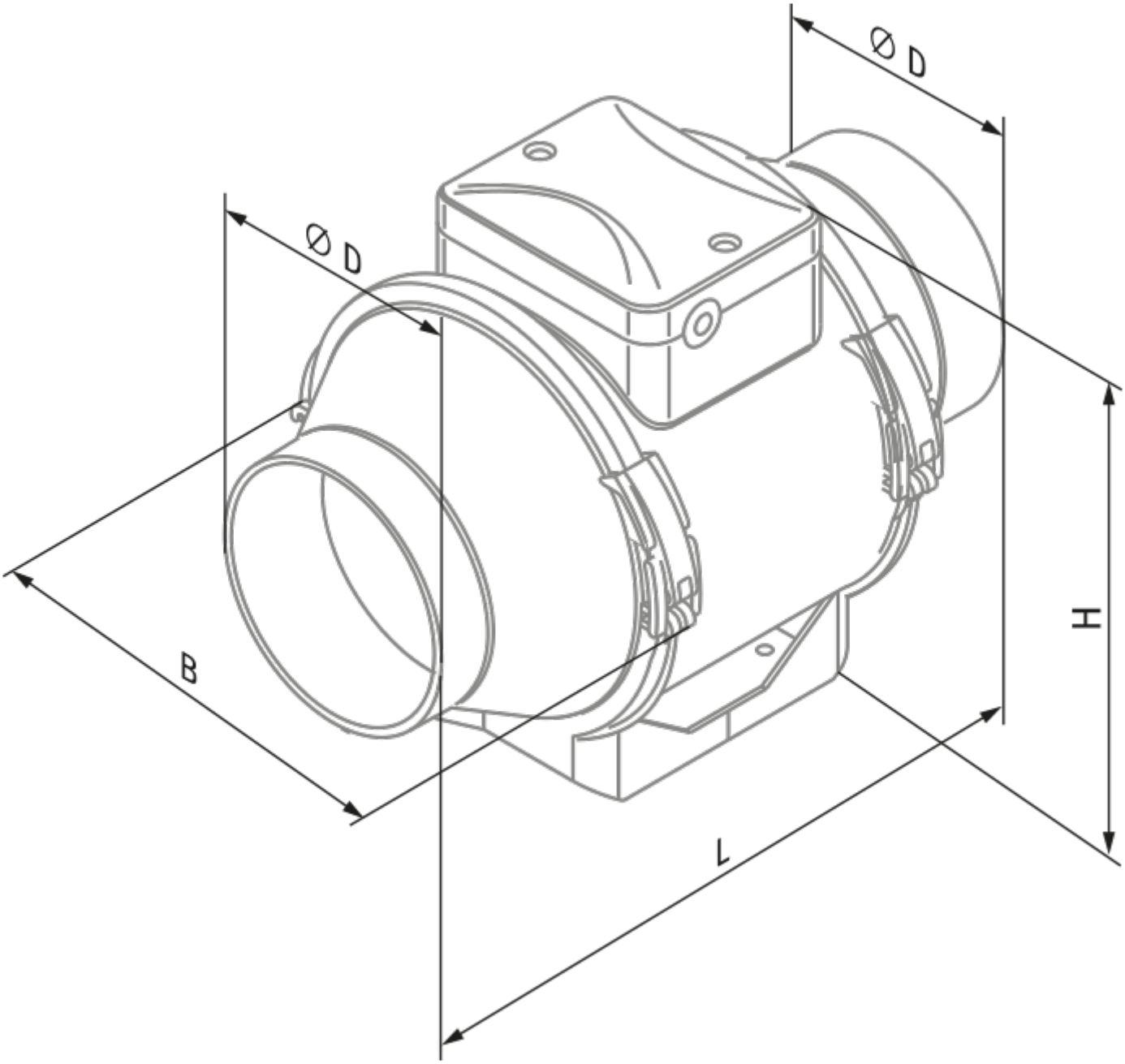
Ø D
Ø D
B
H
L

## Ecodesign

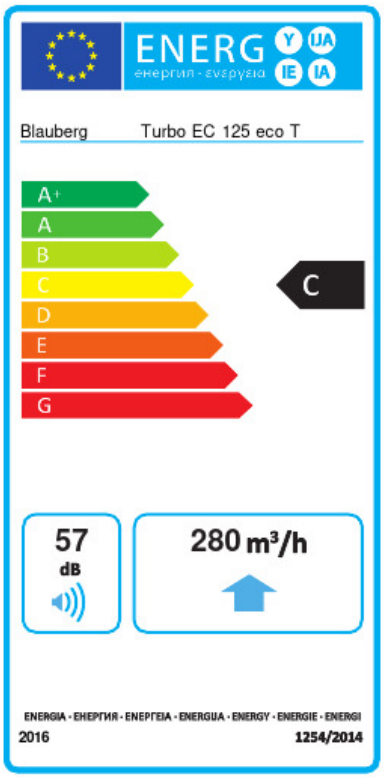


| | | | | | | |
|---|---|---|---|---|---|---|
| Trademark | Blauberg | | | | | |
| Model | Turbo EC 125 eco T | | | | | |
| Specific energy consumption (SEC) (kWh/(m²/a)) | Cold | | Average | | Warm | |
| | -49.3 | A+ | -24.3 | C | -9.9 | F |
| Type of ventilation unit | Unidirectional | | | | | |
| Type of drive installed | Variable speed | | | | | |
| Type of heat recovery system | None | | | | | |
| Maximum flow rate (m³/h) | 280 | | | | | |
| Electric power input (W) | 37 | | | | | |
| Reference flow rate (m³/s) | 0.049 | | | | | |
| Specific power input (SPI) (W/(m³/h)) | 0.135 | | | | | |
| Control typology | Local demand control | | | | | |
| Maximum external leakage rates (%) | 2.7 | | | | | |
| Sound power level (dB(A)) | 57 | | | | | |
| Declared typology | RVU UVU | | | | | |
| The annual electricity consumption (AEC) (kWh/a) | Cold | | Average | | Warm | |
| | 78 | | 78 | | 78 | |
| The annual heating saved (AHS) (kWh/a) | Cold | | Average | | Warm | |
| | 5131 | | 2623 | | 1186 | |