

Turbo EC 100

Mixed-flow inline fans with EC-motors

- Impeller type: Mixed-flow
- Casing material: Polypropylene
- Installation in any position

	Unit of measurement	Turbo EC 100
Phases	-	1
Minimum supply voltage	V	230
Maximum supply voltage	V	230
Power supply frequency	Hz	50/60
Maximum airflow	m³/h	280
Weight	kg	1.75
Transported air temperature (max)	°C	40
Transported air temperature (min)	°C	-25
Ingress protection rating	-	IPX4
Impeller material	-	Plastic

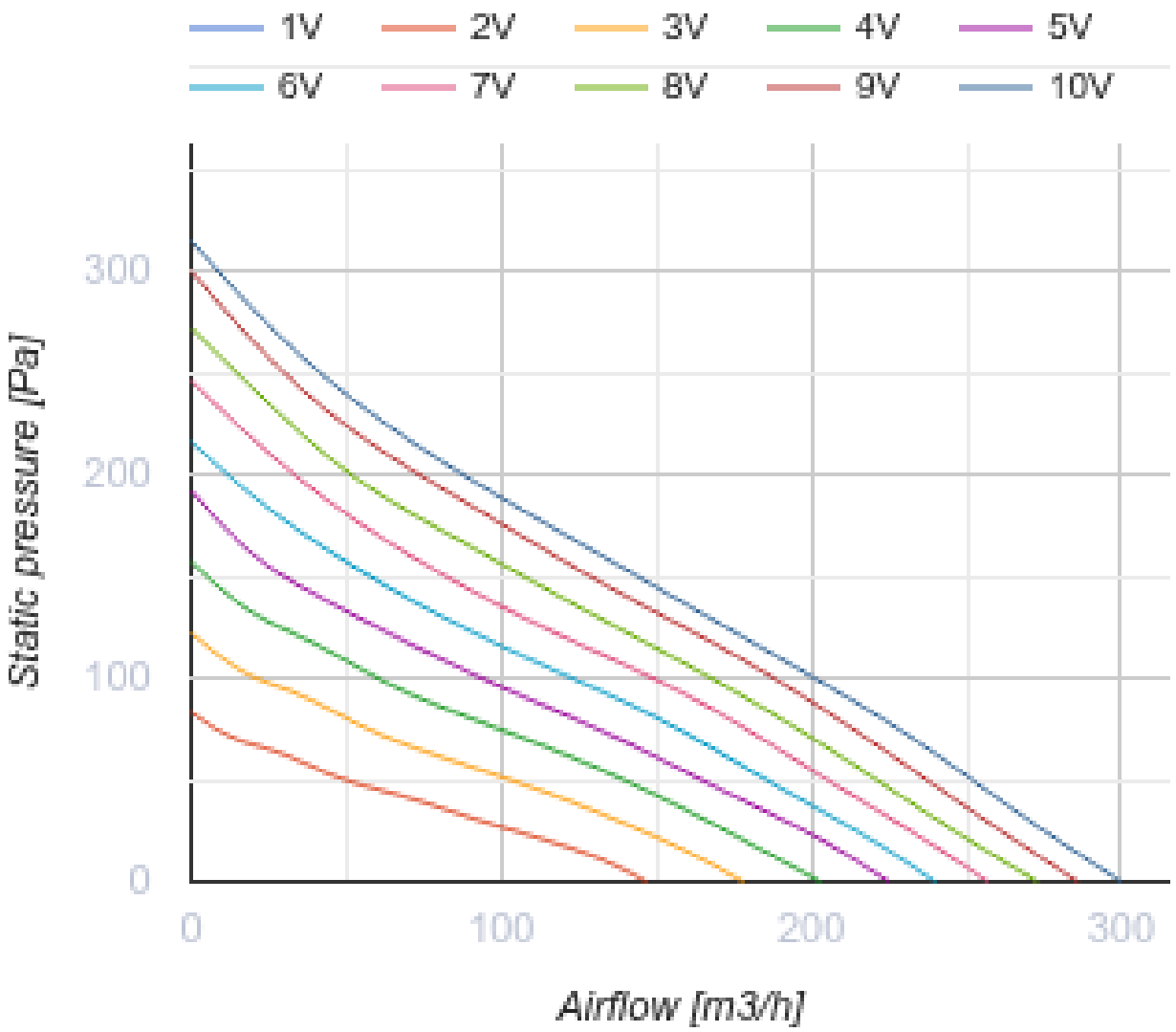
1V
2V
3V
4V
5V
6V
7V
8V
9V
10V
300
200
100
0
Static pressure [Pa]
0
100
200
300
Airflow [m3/h]

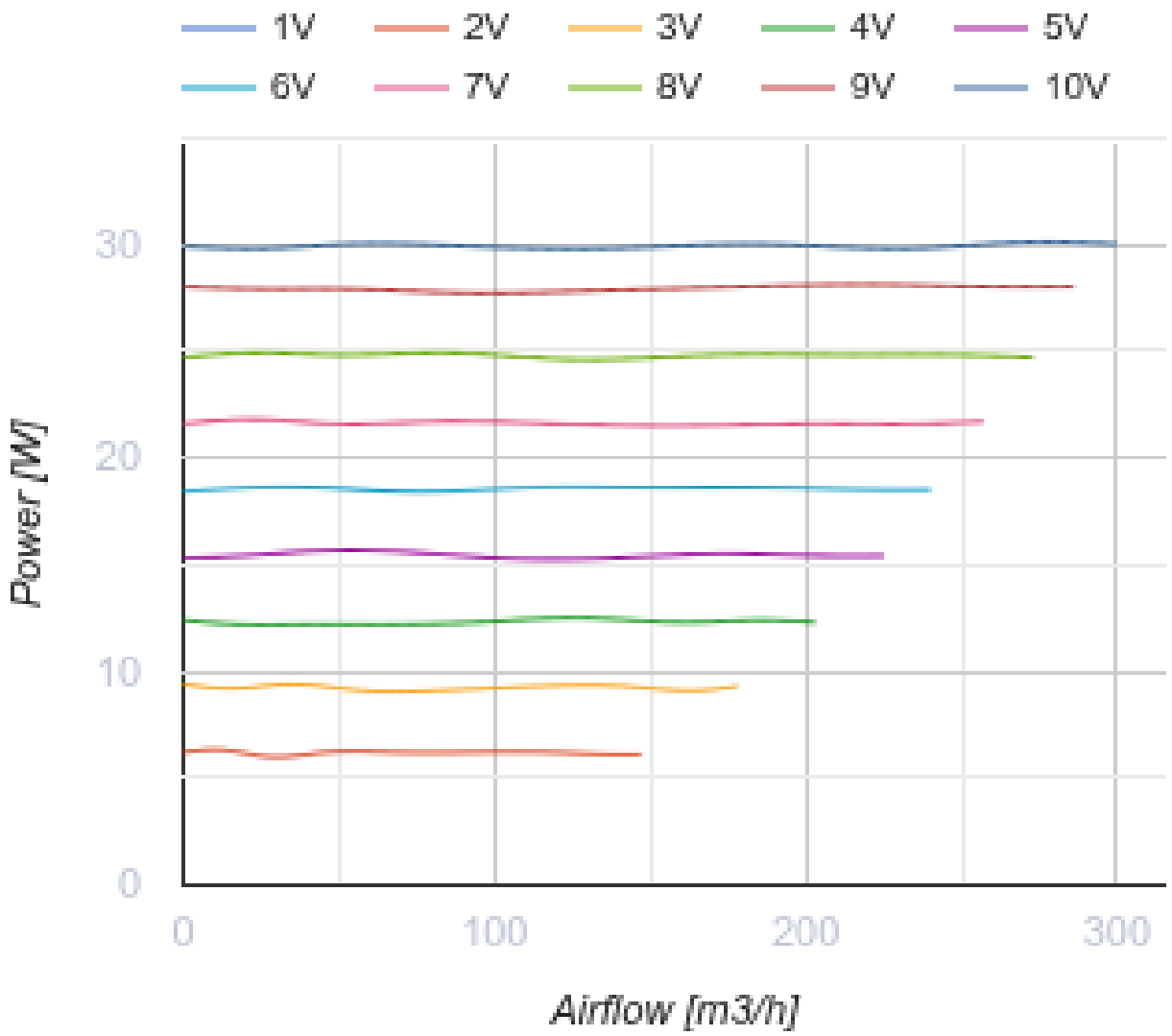

Dimensions

Ø D	Ø D1	B	H	L
98	164	192	241	302.5

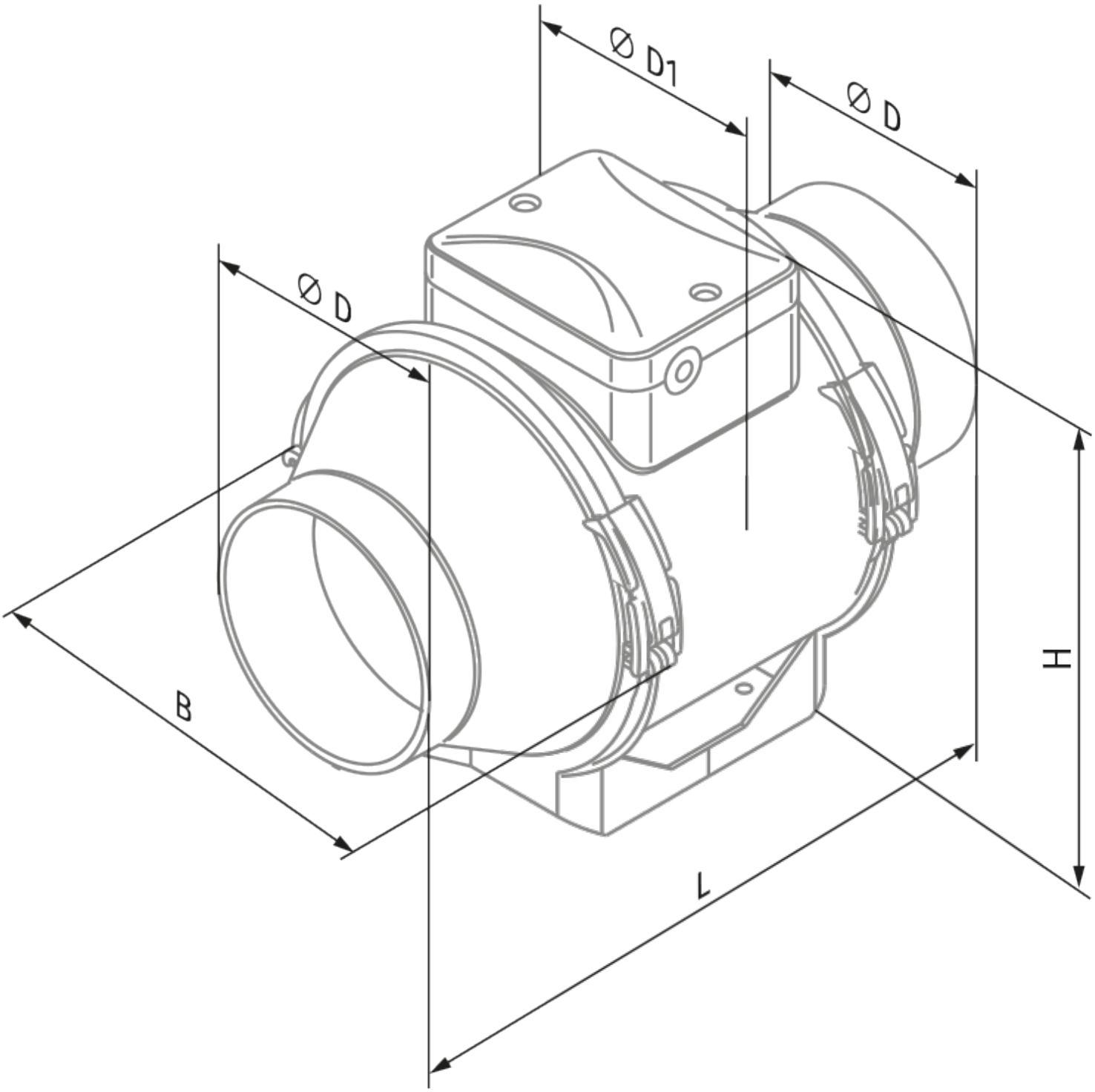
Ø D1
Ø D
Ø D
B
H
L

Ecodesign

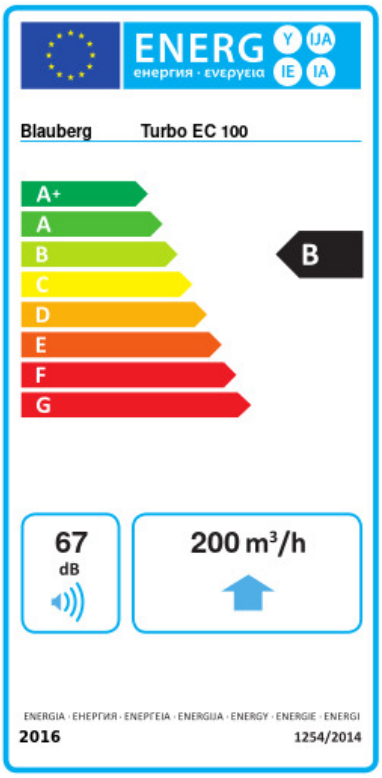

Trademark	Blauberg					
Model	Turbo EC 100					
Specific energy consumption (SEC) (kWh/(m²/a))	Cold		Average		Warm	
	-53.9	A+	-26.9	B	-11.4	E
Type of ventilation unit	Unidirectional					
Type of drive installed	Variable speed					
Type of heat recovery system	None					
Maximum flow rate (m³/h)	200					
Electric power input (W)	30					
Reference flow rate (m³/s)	0.039					
Reference pressure difference (Pa)	50					
Specific power input (SPI) (W/(m³/h))	0.109					
Control typology	Local demand control					
Maximum external leakage rates (%)	2.7					
Declared typology	RVU UVU					
Sound power level (dB(A))	67					
The annual electricity consumption (AEC) (kWh/a)	Cold		Average		Warm	
	58		58		58	
The annual heating saved (AHS) (kWh/a)	Cold		Average		Warm	
	5536		2830		1280	

Accessories

For round ducts

Name	Photo	Description
SD 100/600		Silencers for round ducts
SD 100/900		Silencers for round ducts
SD 100/1200		Silencers for round ducts

For round ducts

Name	Photo	Description
KFBK 100		Filter boxes for round ducts
KFBT 100 G4	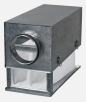	Filter boxes with pocket filters for round ducts
KFBT 100 F5		Filter boxes with pocket filters for round ducts
KFBT 100 F7		Filter boxes with pocket filters for round ducts

For round ducts

Name	Photo	Description
VRV 100		Backdraft dampers with spring for round ducts
VKA 100		Air dampers for round ducts

Water heaters

Name	Photo	Description
WKH 100-2		Duct water heaters for round ducts
WKH 100-4		Duct water heaters for round ducts

Electrical heaters

Name	Photo	Description
EKH 100-0.6		Duct electrical heaters for round ducts
EKH 100-0.8		Duct electrical heaters for round ducts

EKH 100-1.2		Duct electrical heaters for round ducts
EKH 100-1.6		Duct electrical heaters for round ducts
EKH 100-1.8		Duct electrical heaters for round ducts

EC motors regulators

Name	Photo	Description
CDT E/0-10		Speed control for EC motors

Fittings

Name	Photo	Description
K 100		Clamp for round flexible ducts
K 100 Zn		Clamp for round flexible ducts