

Turbo EC 100 eco

Inline mixed-flow fans

- Impeller type: Mixed-flow
- Casing material: Plastic
- Installation in any position

	Unit of measurement	Turbo EC 100 eco	
Phases	-	1	
Minimum supply voltage	V	230	
Maximum supply voltage	V	230	
Power supply frequency	Hz	50/60	
Maximum airflow	m³/h	170	210
Weight	kg	1.45	
Transported air temperature (max)	°C	40	
Transported air temperature (min)	°C	-25	
Ingress protection rating	-	IPX4	
Ingress protection rating of the drive	-	IPX4	
Impeller material	-	Plastic	

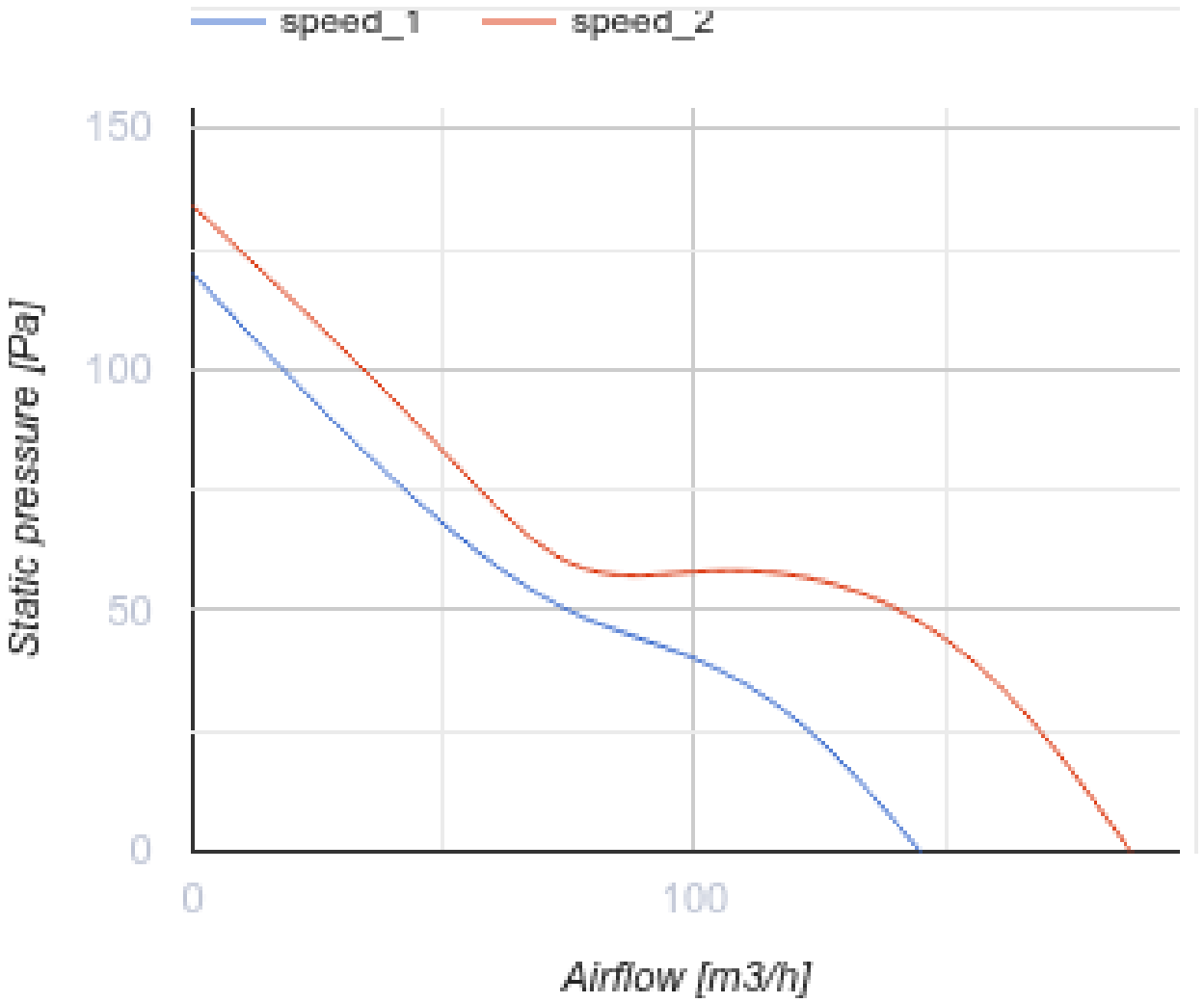
speed_1
speed_2
150
100
50
0
Static pressure [Pa]
0
100
Airflow [m3/h]

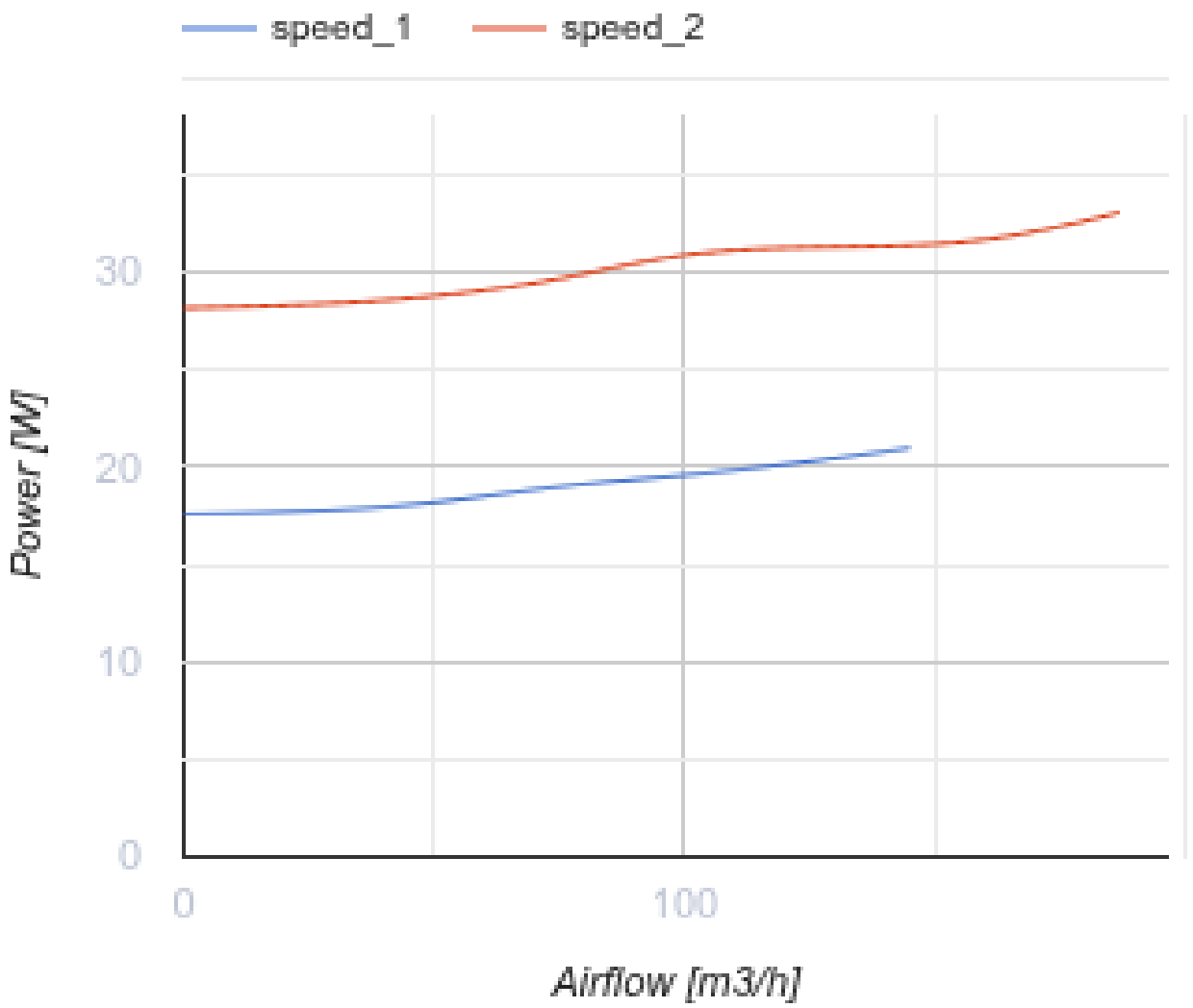

Dimensions

Ø D	B	H	L
96	167	190	246

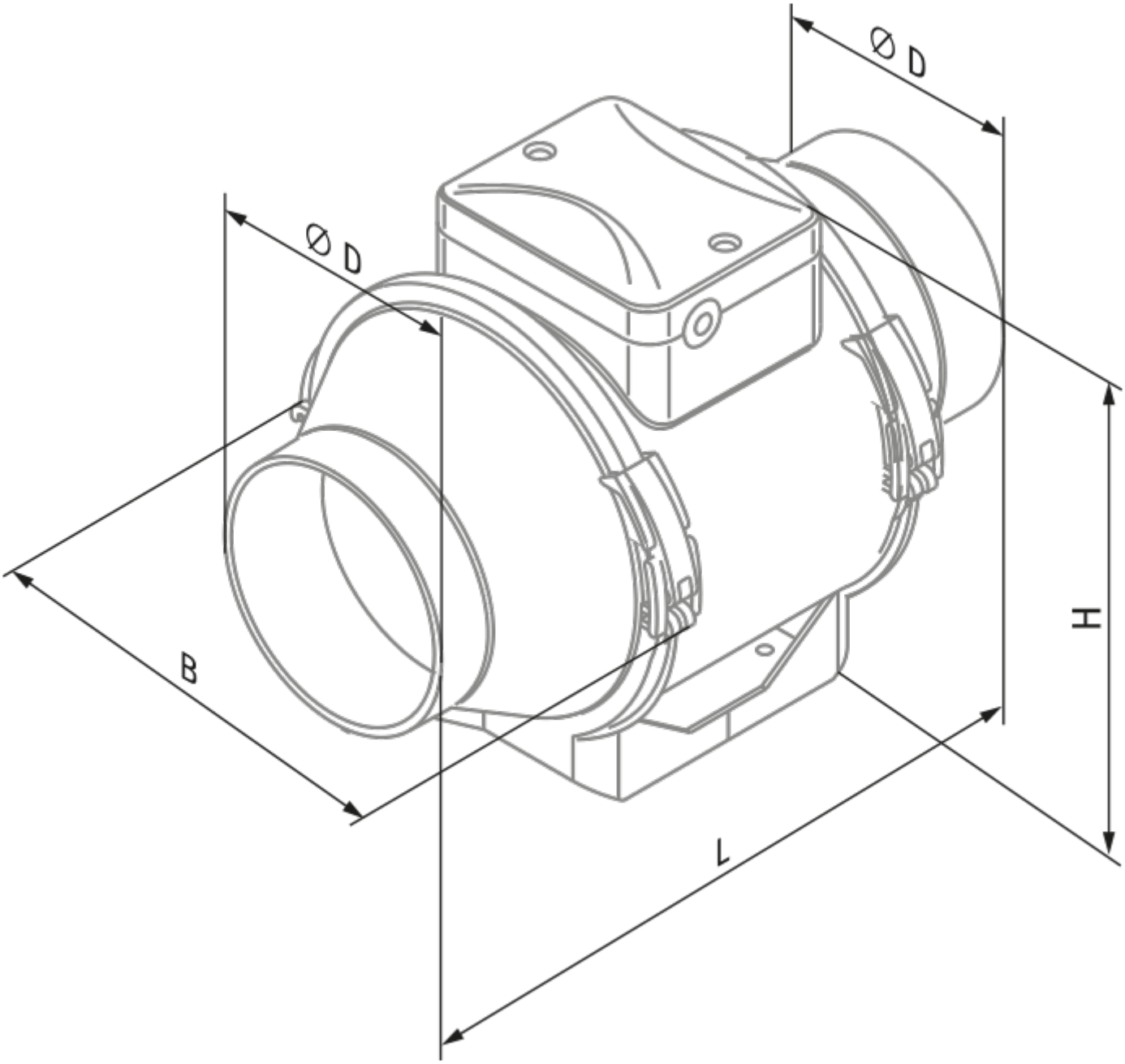
Ø D
Ø D
B
H
L

Ecodesign

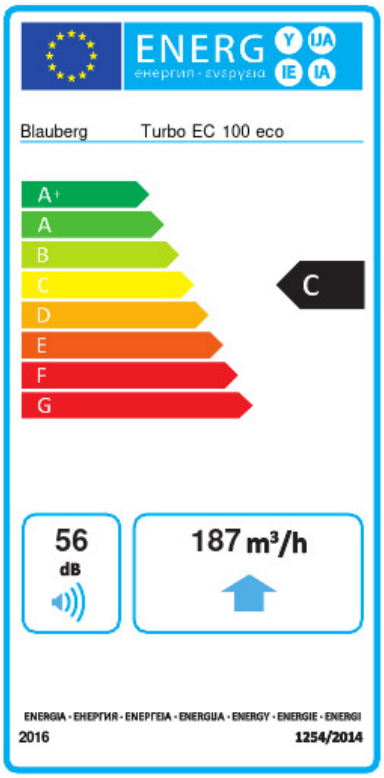

Trademark	Blauberg					
Model	Turbo EC 100 eco					
Specific energy consumption (SEC) (kWh/(m²/a))	Cold		Average		Warm	
	-49.5	A+	-24.4	C	-10.1	E
Type of ventilation unit	Unidirectional					
Type of drive installed	Variable speed					
Type of heat recovery system	None					
Maximum flow rate (m³/h)	187					
Electric power input (W)	33					
Reference flow rate (m³/s)	0.036					
Specific power input (SPI) (W/(m³/h))	0.123					
Control typology	Local demand control					
Maximum external leakage rates (%)	2.7					
Declared typology	RVU UVU					
Sound power level (dB(A))	56					
The annual electricity consumption (AEC) (kWh/a)	Cold		Average		Warm	
	72		72		72	
The annual heating saved (AHS) (kWh/a)	Cold		Average		Warm	
	5131		2623		1186	

Accessories

For round ducts

Name	Photo	Description
SD 100/600		Silencers for round ducts
SD 100/900		Silencers for round ducts
SD 100/1200		Silencers for round ducts

For round ducts

Name	Photo	Description
KFBK 100		Filter boxes for round ducts
KFBT 100 G4	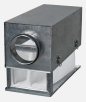	Filter boxes with pocket filters for round ducts
KFBT 100 F5		Filter boxes with pocket filters for round ducts
KFBT 100 F7		Filter boxes with pocket filters for round ducts

For round ducts

Name	Photo	Description
VRV 100		Backdraft dampers with spring for round ducts
VKA 100		Air dampers for round ducts

Water heaters

Name	Photo	Description
WKH 100-2		Duct water heaters for round ducts
WKH 100-4		Duct water heaters for round ducts

Electrical heaters

Name	Photo	Description
EKH 100-0.6		Duct electrical heaters for round ducts
EKH 100-0.8		Duct electrical heaters for round ducts
EKH 100-1.2		Duct electrical heaters for round ducts

EKH 100-1.6		Duct electrical heaters for round ducts
EKH 100-1.8		Duct electrical heaters for round ducts

Speed control switches

Name	Photo	Description
CDP-2/5		Multi-speed switch
CDP-2/10		Multi-speed switch