

Turbo-E 160 TW1

Mixed-flow inline fans

- Impeller type: Mixed-flow
- Casing material: Plastic
- Installation in any position
- Cable with mains plug
- Timer: Turn off timer

	Unit of measurement	Turbo-E 160 TW1	
Speed	-	1	2
Phases	-	1	
Minimum supply voltage	V	230	
Maximum supply voltage	V	230	
Power supply frequency	Hz	50/60	
Maximum airflow	m³/h	405	520
Weight	kg	3.22	
Transported air temperature (max)	°C	60	
Transported air temperature (min)	°C	-25	
Ingress protection rating	-	IPX4	
Ingress protection rating of the drive	-	IPX4	
Impeller material	-	Plastic	

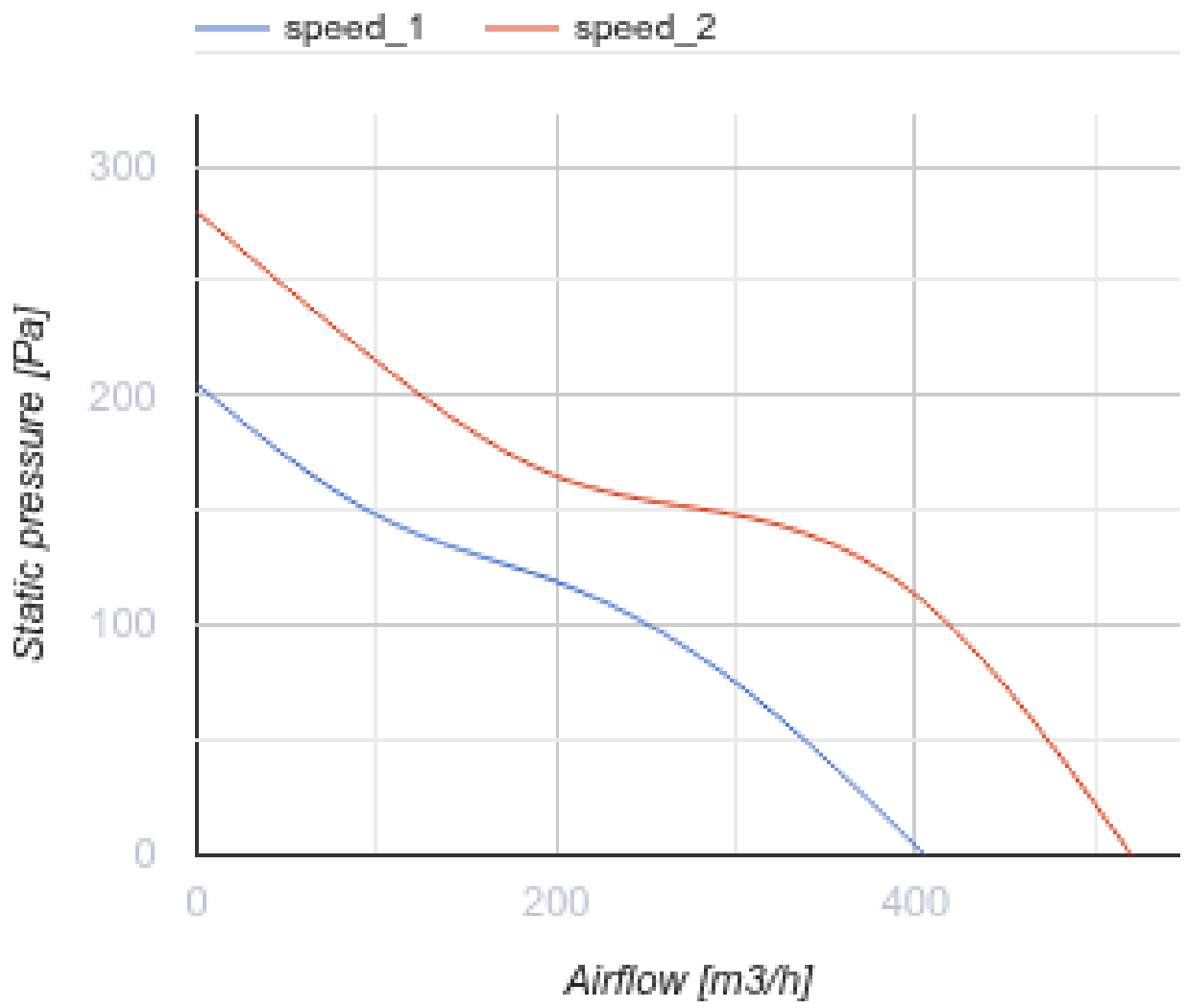
speed_1
speed_2
300
200
100
0
Static pressure [Pa]
0
200
400
Airflow [m3/h]

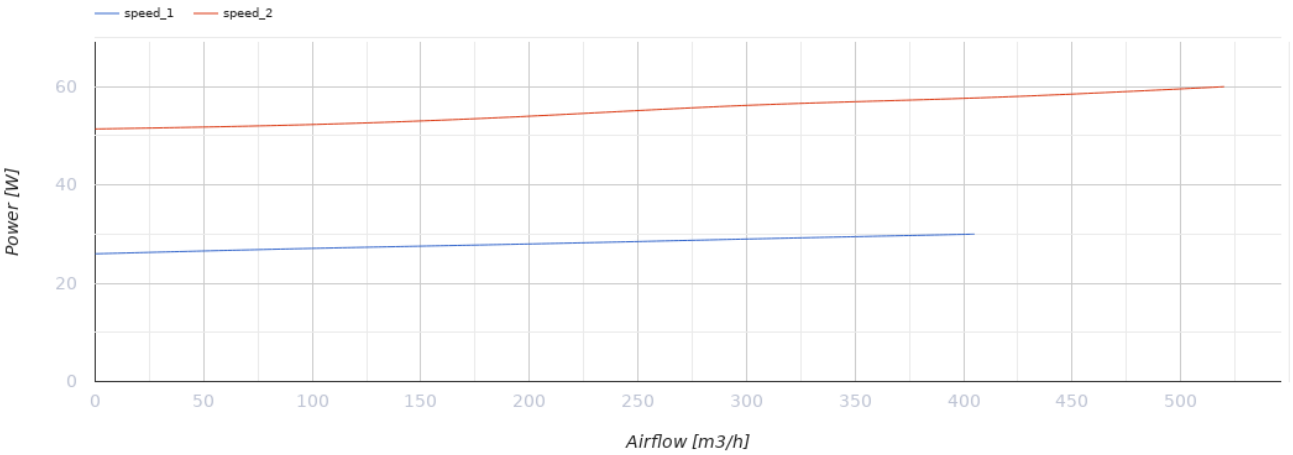
speed_1
speed_2
60
40
20
0
Power [W]
0
50
100
150
200
250
300
350
400
450
500
Airflow [m3/h]

Dimensions

Ø D	B	H	L
158	233	265	295

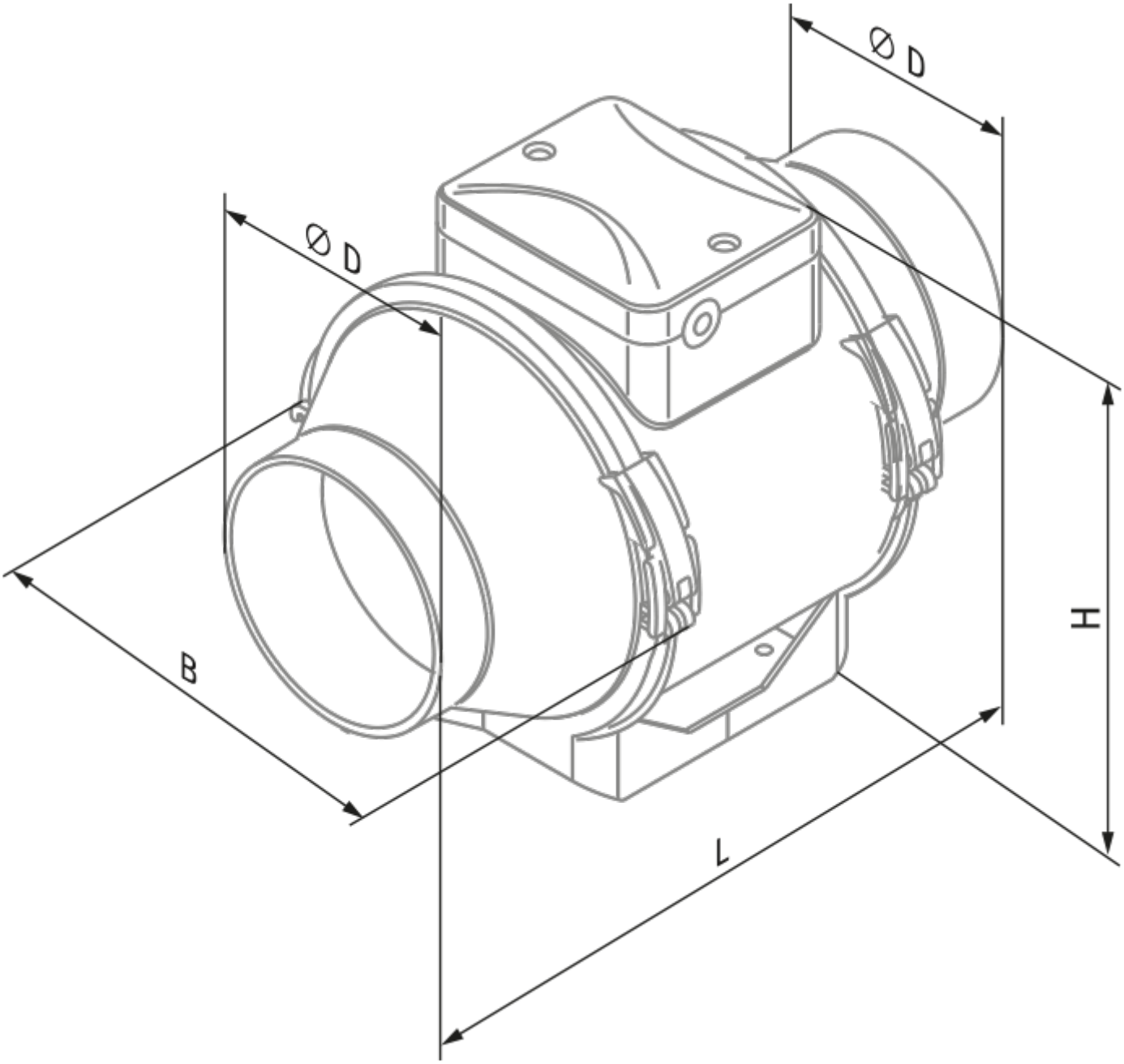

Ecodesign

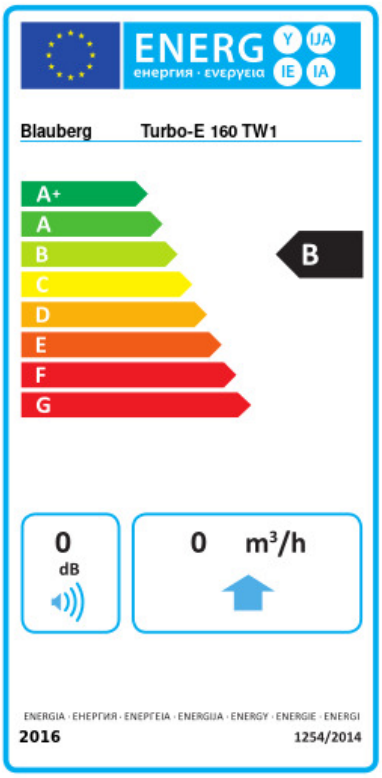

Trademark	Blauberg					
Model	Turbo-E 160 TW1					
Specific energy consumption (SEC) (kWh/(m²/a))	Cold		Average		Warm	
	-53.9	A+	-26.8	B	-11.3	E
Type of ventilation unit	Unidirectional					
Type of drive installed	Variable speed					
Type of heat recovery system	None					
Maximum flow rate (m³/h)	400					
Electric power input (W)	60					
Reference flow rate (m³/s)	0.086					
Reference pressure difference (Pa)	50					
Specific power input (SPI) (W/(m³/h))	0.113					
Control typology	Local demand control					
Maximum external leakage rates (%)	2.7					
Declared typology	RVU UVU					
Sound power level (dB(A))	64					
The annual electricity consumption (AEC) (kWh/a)	Cold		Average		Warm	
	60		60		60	
The annual heating saved (AHS) (kWh/a)	Cold		Average		Warm	
	5536		2830		1280	