

Turbo-E 100 T

Mixed-flow inline fans

- Impeller type: Mixed-flow
- Casing material: Plastic
- Installation in any position
- Timer: Turn off timer

	Unit of measurement	Turbo-E 100 T	
Speed	-	1	2
Phases	-	1	
Minimum supply voltage	V	230	
Maximum supply voltage	V	230	
Power supply frequency	Hz	50/60	
Maximum airflow	m³/h	145	187
Weight	kg	1.45	
Transported air temperature (max)	°C	40	
Transported air temperature (min)	°C	-25	
Ingress protection rating	-	IPX4	
Ingress protection rating of the drive	-	IPX4	
Impeller material	-	Plastic	

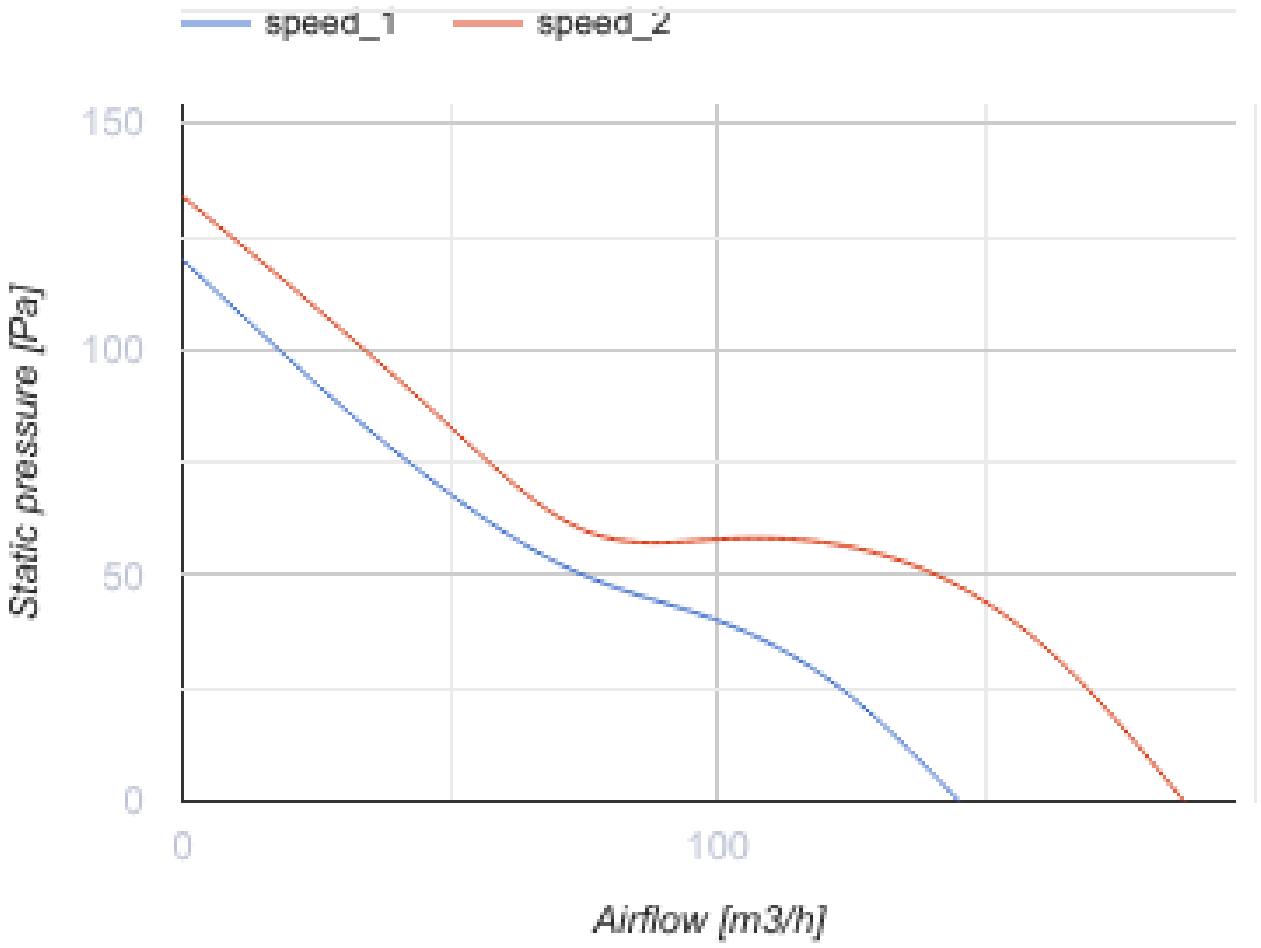
speed_1
speed_2
150
100
50
0
Static pressure [Pa]
0
100
Airflow [m3/h]

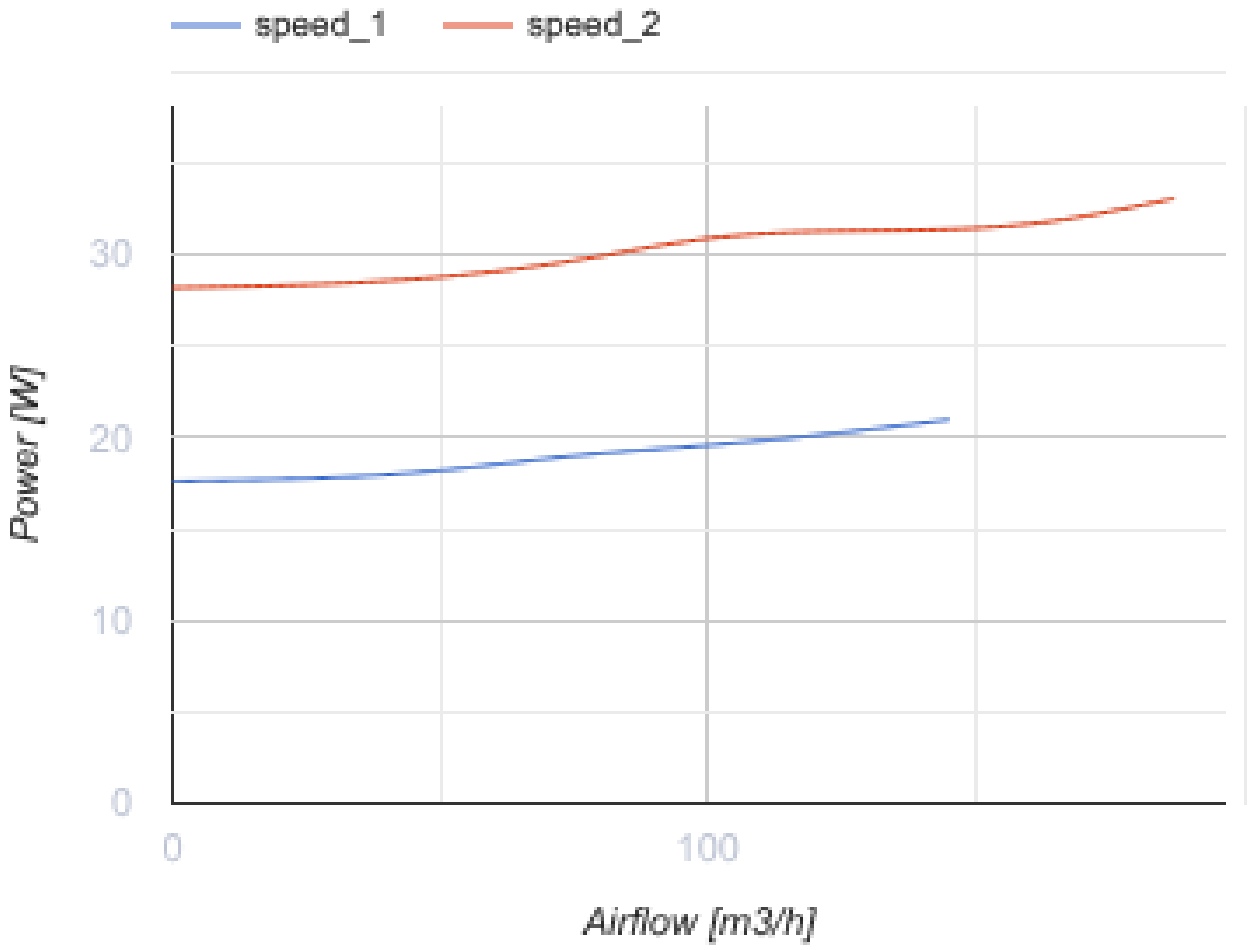

Dimensions

Ø D	B	H	L
96	167	190	246

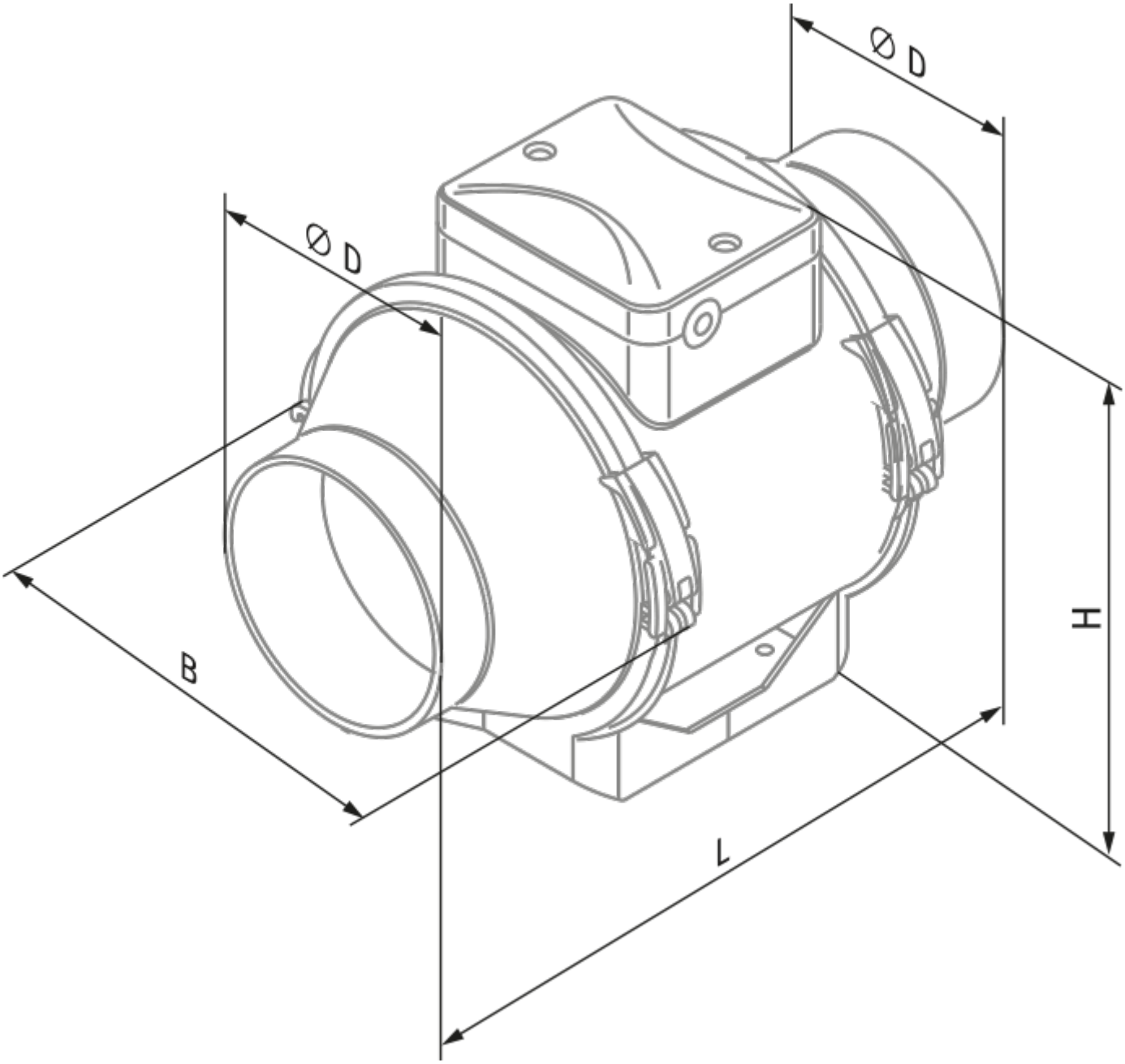
Ø D
Ø D
B
H
L

Ecodesign

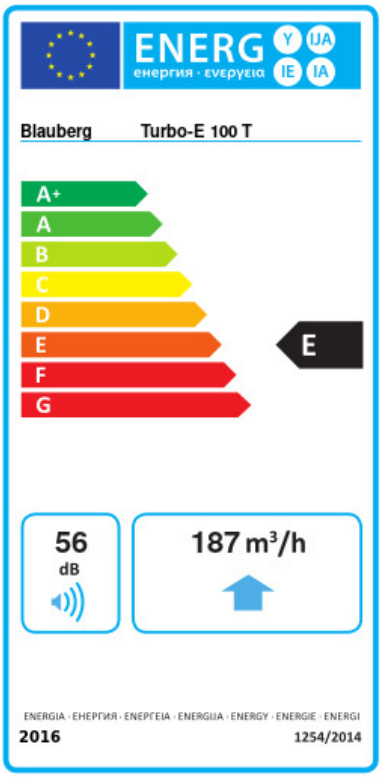

Trademark	Blauberg					
Model	Turbo-E 100 T					
Specific energy consumption (SEC) (kWh/(m²/a))	Cold		Average		Warm	
	-49.5	A+	-24.4	C	-10.1	E
Type of ventilation unit	Unidirectional					
Type of drive installed	Variable speed					
Type of heat recovery system	None					
Maximum flow rate (m³/h)	187					
Electric power input (W)	33					
Reference flow rate (m³/s)	0.036					
Specific power input (SPI) (W/(m³/h))	0.123					
Control typology	Local demand control					
Maximum external leakage rates (%)	2.7					
Declared typology	RVU UVU					
Sound power level (dB(A))	56					
The annual electricity consumption (AEC) (kWh/a)	Cold		Average		Warm	
	72		72		72	
The annual heating saved (AHS) (kWh/a)	Cold		Average		Warm	
	5131		2623		1186	