

# Turbo 315 T

Mixed-flow inline fans

- Impeller type: Mixed-flow
- Casing material: Polypropylene
- Installation in any position
- Timer: Turn off timer

| | Unit of measurement | Turbo 315 T | |
|---|---|---|---|
| Speed | - | 1 | 2 |
| Phases | - | 1 | |
| Maximum supply voltage | V | 230 | |
| Minimum supply voltage | V | 230 | |
| Power supply frequency | Hz | 50/60 | |
| Maximum airflow | m³/h | 1570 | 2050 |
| Weight | kg | 11.95 | |
| Transported air temperature (max) | °C | 60 | |
| Ingress protection rating | - | IPX4 | |
| Ingress protection rating of the drive | - | IPX4 | |
| Impeller material | - | Plastic | |

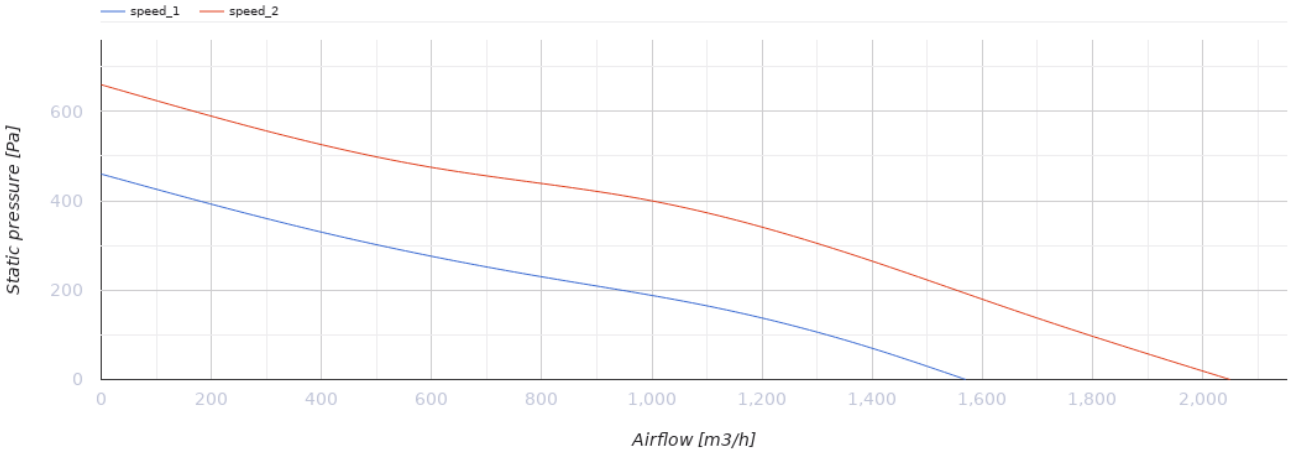


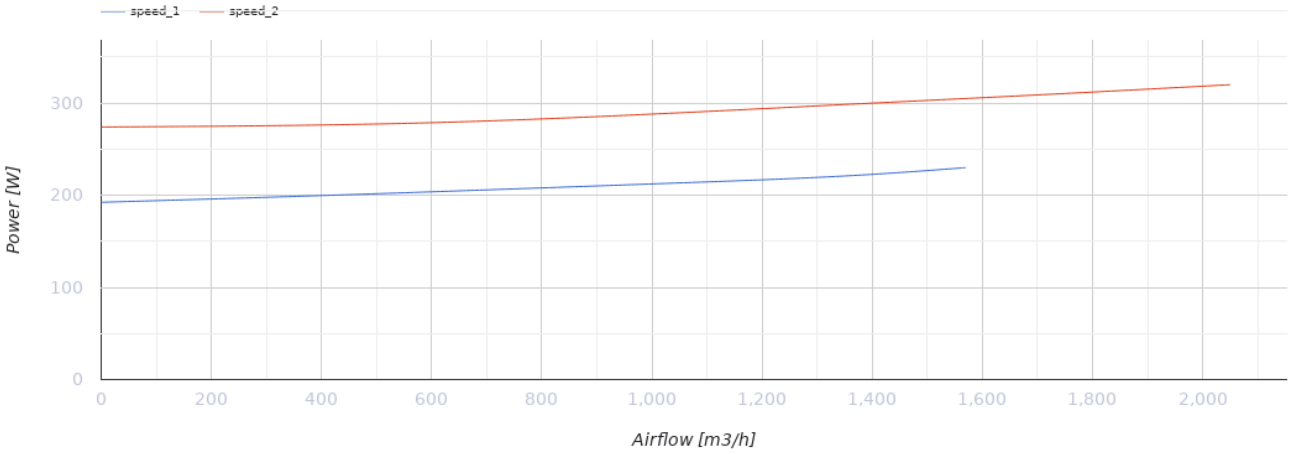


## Dimensions

| ØD | ØD1 | B | H | L |
|---|---|---|---|---|
| 310 | 323 | 362 | 408 | 445 |

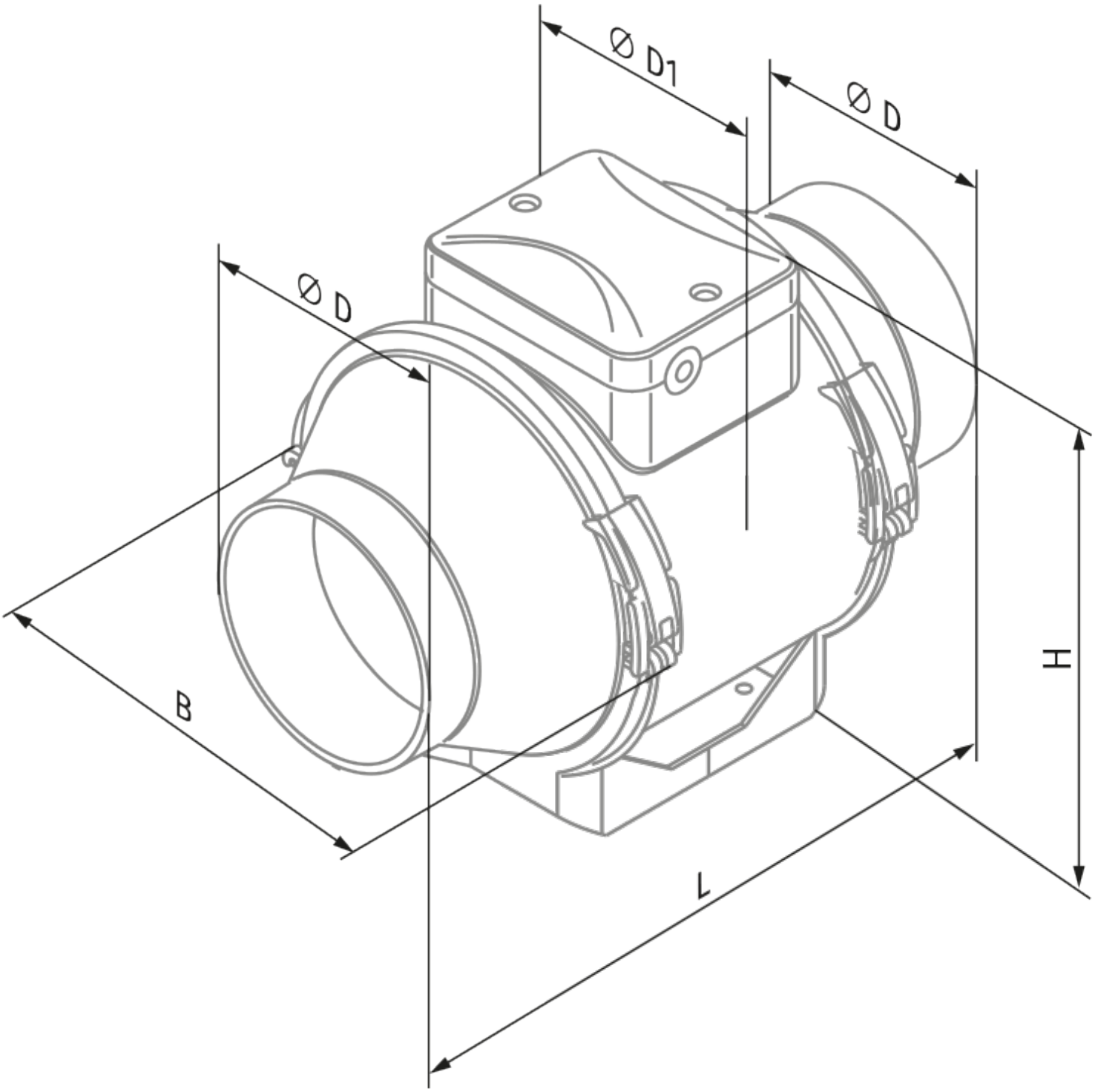
Ø D1
Ø D
Ø D
B
H
L

## Ecodesign

| | |
|---|---|
| Trademark | Blauberg |
| Model | Turbo 315 T |
| Type of ventilation unit | Unidirectional |
| Type of drive installed | External MSD or VSD |
| Type of heat recovery system | None |
| Nominal external pressure (Pa) | 392 |
| Maximum external leakage rates (%) | 2.7 |
| Static efficiency (%) | 33.3 |
| Sound power level (dB(A)) | 74 |
| Effective electric power input (kW) | 0.332 |
| Declared typology | NRVU UVU |

## Accessories

### For round ducts

| Name | Photo | Description |
|---|---|---|
| SD 315/600 |  | Silencers for round ducts |
| SD 315/900 |  | Silencers for round ducts |
| SD 315/1200 |  | Silencers for round ducts |

### For round ducts

| Name | Photo | Description |
|---|---|---|
| KFBK 315 |  | Filter boxes for round ducts |
| KFBT 315 G4 |  | Filter boxes with pocket filters for round ducts |

| | | |
|---|---|---|
| KFBT 315 F5 |  | Filter boxes with pocket filters for round ducts |
| KFBT 315 F7 |  | Filter boxes with pocket filters for round ducts |

### For round ducts

| Name | Photo | Description |
|---|---|---|
| VRV 315 |  | Backdraft dampers with spring for round ducts |
| VKA 315 |  | Air dampers for round ducts |

### Water heaters

| Name | Photo | Description |
|---|---|---|
| WKH 315-2 |  | Duct water heaters for round ducts |
| WKH 315-4 |  | Duct water heaters for round ducts |

### Electrical heaters

| Name | Photo | Description |
|---|---|---|
| EKH 315-1.2 |  | Duct electrical heaters for round ducts |
| EKH 315-2.0 |  | Duct electrical heaters for round ducts |
| EKH 315-2.4 |  | Duct electrical heaters for round ducts |

### Speed controllers

| Name | Photo | Description |
|---|---|---|
| CDT E1.8 |  | Thyristor speed controller |

| | | |
|---|---|---|
| CDT1 E1.5 |  | Multi-speed switches |

### Speed control switches

| Name | Photo | Description |
|---|---|---|
| CDP-2/5 |  | Multi-speed switch |
| CDP-2/10 |  | Multi-speed switch |

### Humidity sensors

| Name | Photo | Description |
|---|---|---|
| HSE / HSI 1.5 |  | Sensors |
| TE / TI 1.5 |  | Timers |
| LSE / LSI 1.5 |  | Sensors |
| IRSE / IRSI 1.5 |  | Sensors |