

Turbo 315 GT1

Mixed-flow inline fans

- Control: Built-in speed controller
- Impeller type: Mixed-flow
- Casing material: Polypropylene
- Installation in any position
- Cable with mains plug
- Temperature sensor: Built-in
- Timer: Turn off timer

	Unit of measurement	Turbo 315 GT1	
Speed	-	1	2
Phases	-	1	
Minimum supply voltage	V	230	
Maximum supply voltage	V	230	
Power supply frequency	Hz	50/60	
Maximum airflow	m³/h	1570	2050
Weight	kg	11.95	
Transported air temperature (max)	°C	60	
Ingress protection rating	-	IPX4	
Ingress protection rating of the drive	-	IPX4	
Impeller material	-	Plastic	

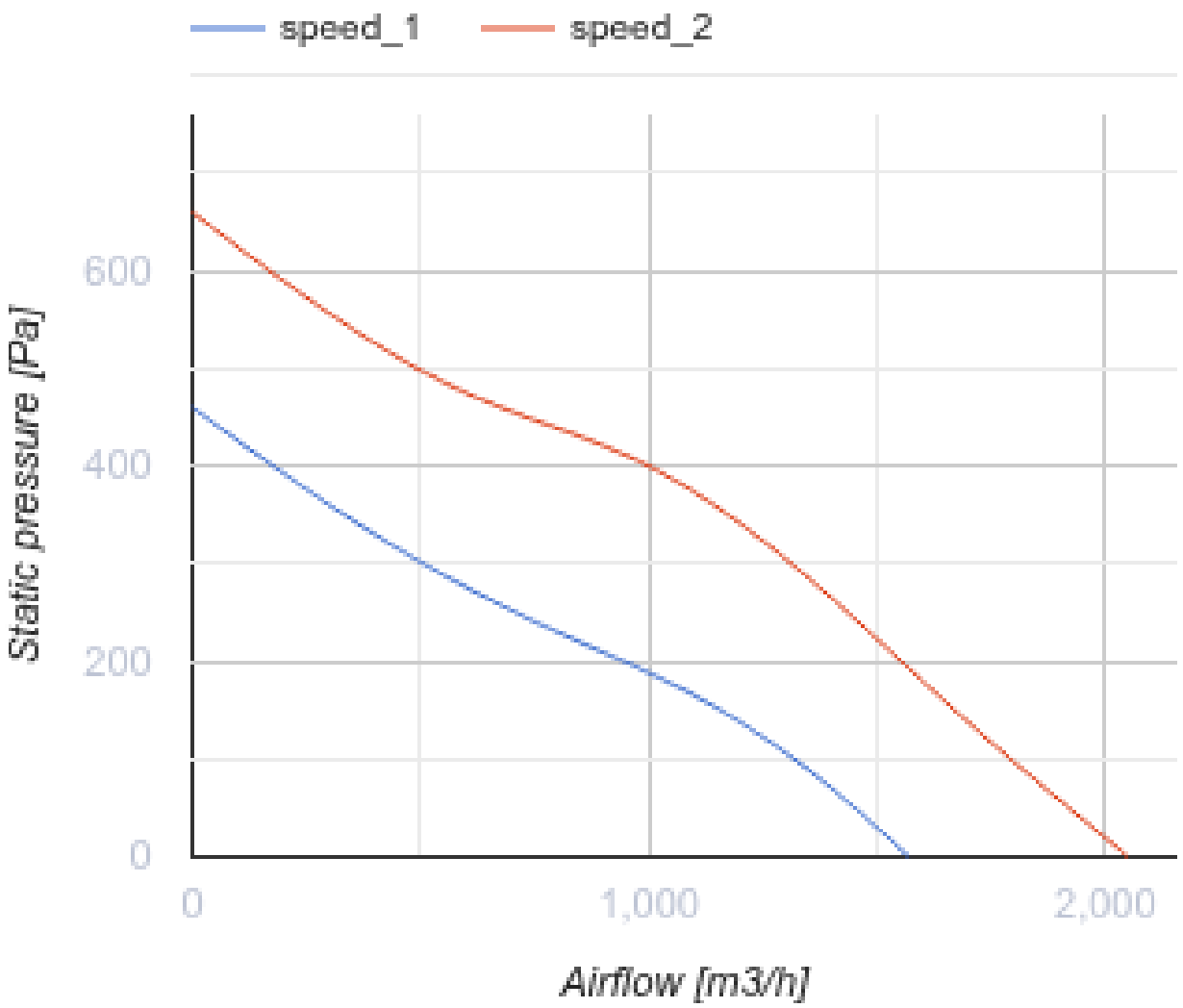
speed_1
speed_2
600
400
200
0
Static pressure [Pa]
0
1,000
2,000
Airflow [m3/h]

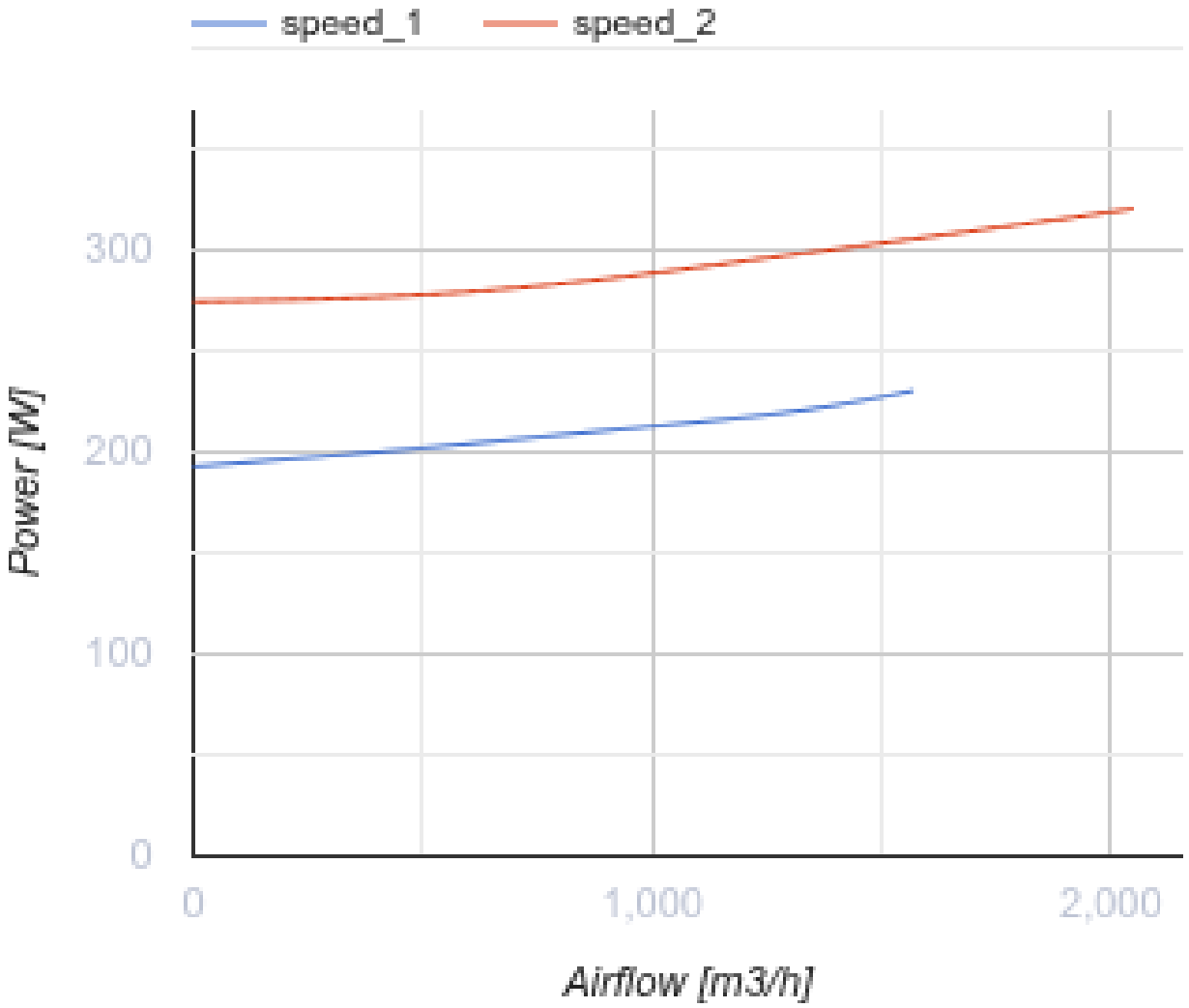

Dimensions

ØD	ØD1	B	H	L
310	323	362	408	445

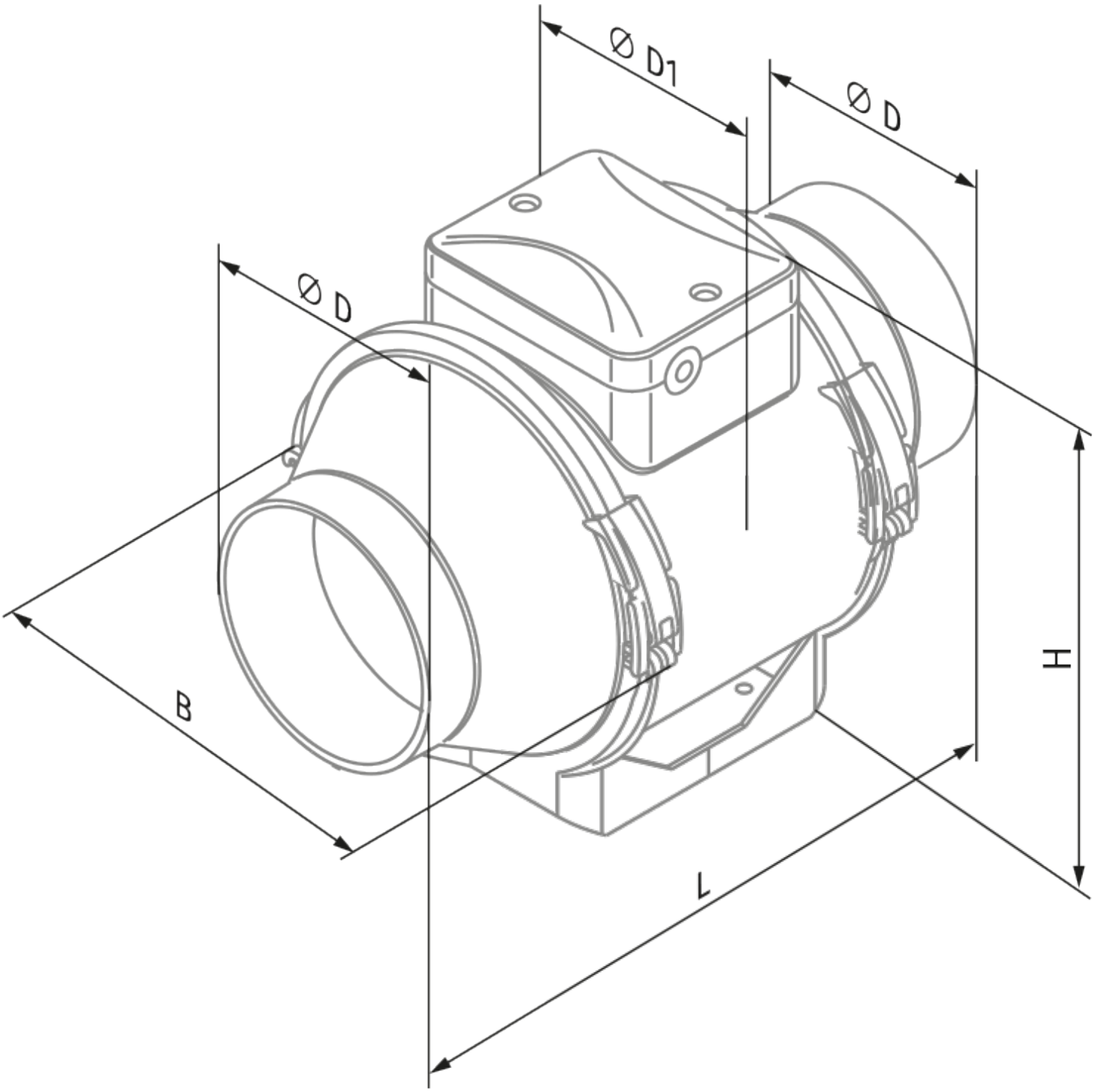
Ø D1
Ø D
Ø D
B
H
L

Ecodesign

Trademark	Blauberg
Model	Turbo 315 GT1
Type of ventilation unit	Unidirectional
Type of drive installed	External MSD or VSD
Type of heat recovery system	None
Nominal external pressure (Pa)	392
Maximum external leakage rates (%)	2.7
Static efficiency (%)	33.3
Declared typology	NRVU UVU
Effective electric power input (kW)	0.332
Sound power level (dB(A))	74

Accessories

For round ducts

Name	Photo	Description
SD 315/600		Silencers for round ducts
SD 315/900		Silencers for round ducts
SD 315/1200		Silencers for round ducts

For round ducts

Name	Photo	Description
KFBK 315		Filter boxes for round ducts
KFBT 315 G4		Filter boxes with pocket filters for round ducts

KFBT 315 F5		Filter boxes with pocket filters for round ducts
KFBT 315 F7		Filter boxes with pocket filters for round ducts

For round ducts

Name	Photo	Description
VRV 315		Backdraft dampers with spring for round ducts
VKA 315		Air dampers for round ducts

Water heaters

Name	Photo	Description
WKH 315-2		Duct water heaters for round ducts
WKH 315-4		Duct water heaters for round ducts

Electrical heaters

Name	Photo	Description
EKH 315-1.2		Duct electrical heaters for round ducts
EKH 315-2.0		Duct electrical heaters for round ducts
EKH 315-2.4		Duct electrical heaters for round ducts

Speed controllers

Name	Photo	Description
CDT E1.8		Thyristor speed controller

CDT1 E1.5		Multi-speed switches

Speed control switches

Name	Photo	Description
CDP-2/5		Multi-speed switch
CDP-2/10		Multi-speed switch

Humidity sensors

Name	Photo	Description
HSE / HSI 1.5		Sensors
TE / TI 1.5		Timers
LSE / LSI 1.5		Sensors
IRSE / IRSI 1.5		Sensors