

# Turbo 150 USW1

Mixed-flow inline fans

- Control: Built-in speed controller
- Impeller type: Mixed-flow
- Casing material: Polypropylene
- Installation in any position
- Cable with mains plug

| | Unit of measurement | Turbo 150 USW1 | |
|---|---|---|---|
| Speed | - | 1 | 2 |
| Phases | - | 1 | |
| Minimum supply voltage | V | 230 | |
| Maximum supply voltage | V | 230 | |
| Power supply frequency | Hz | 50/60 | |
| Maximum airflow | m³/h | 415 | 565 |
| Weight | kg | 2.95 | |
| Transported air temperature (max) | °C | 60 | |
| Ingress protection rating | - | IPX4 | |
| Ingress protection rating of the drive | - | IPX4 | |
| Impeller material | - | Plastic | |

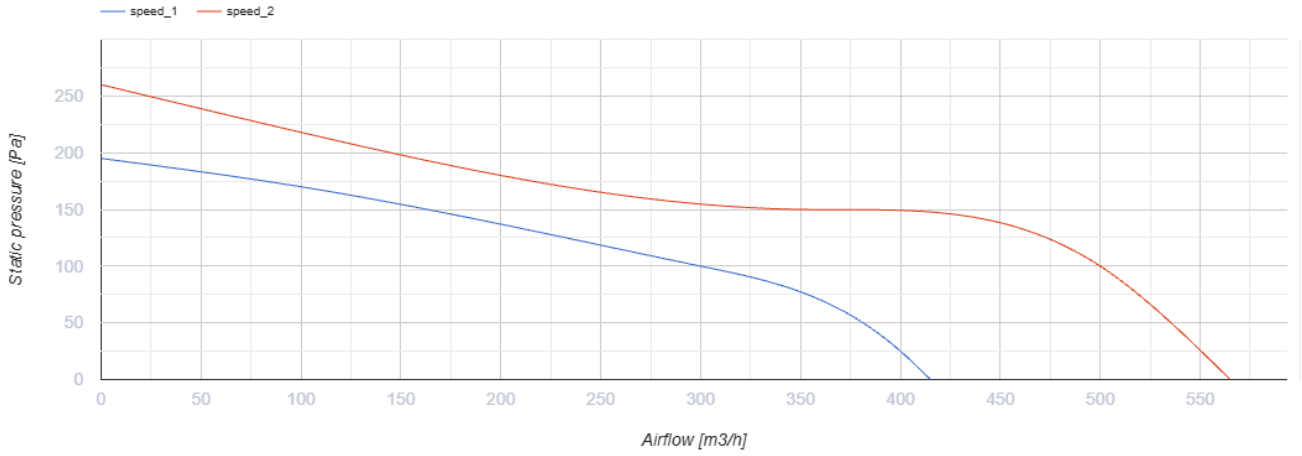


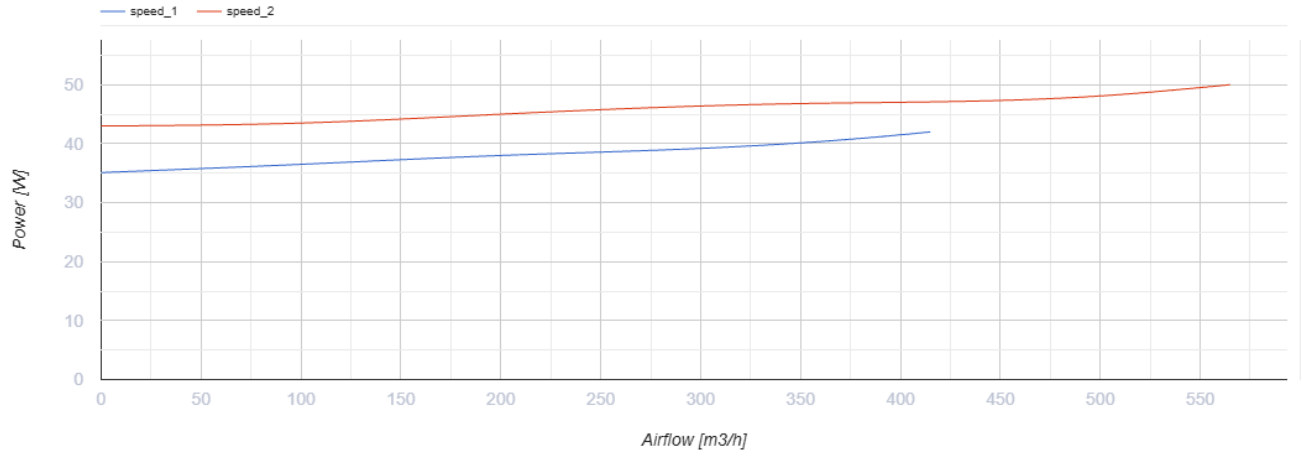


## Dimensions

| ØD | ØD1 | B | H | L |
|---|---|---|---|---|
| 148 | 187 | 220 | 251 | 289 |

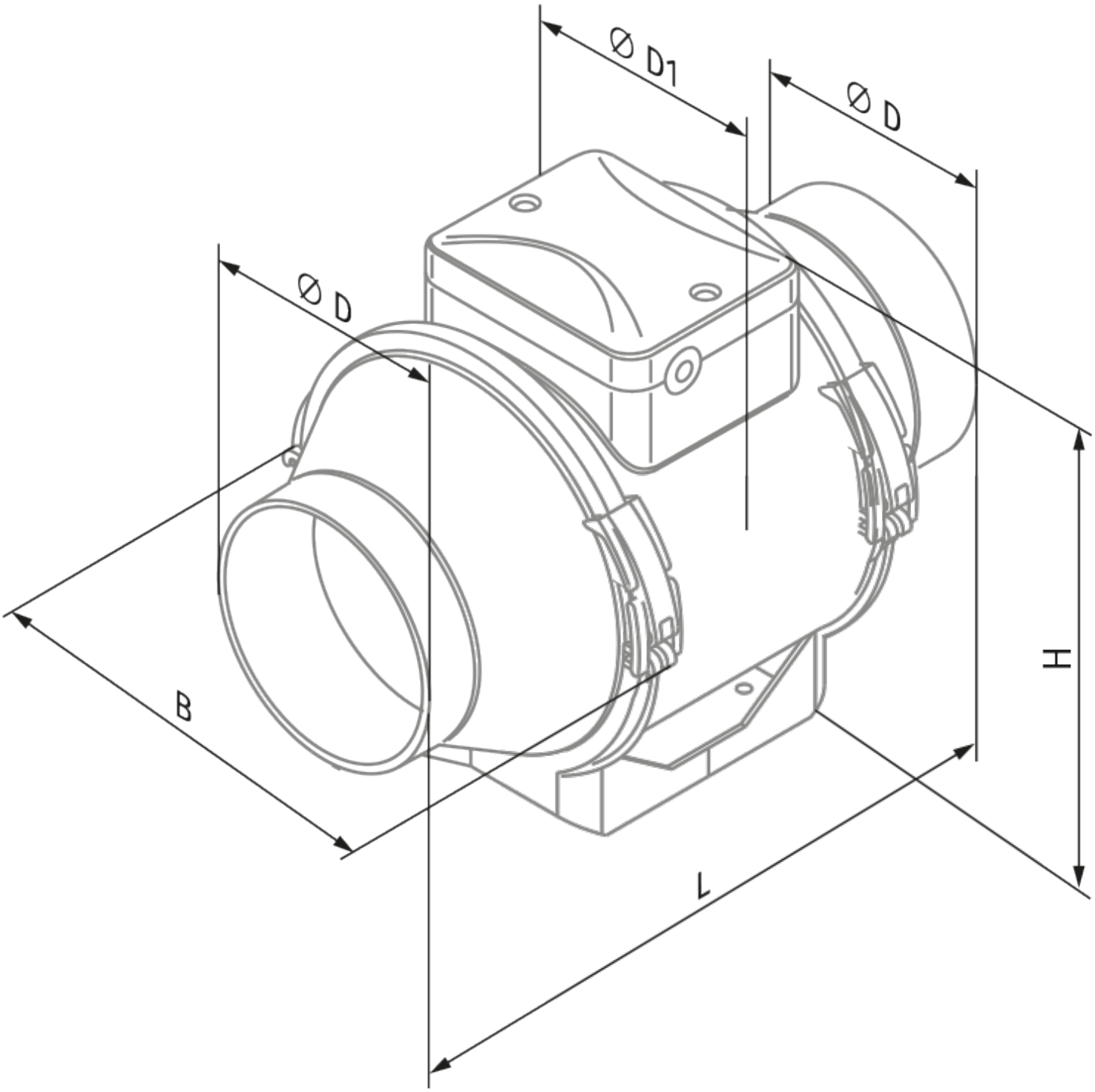
Ø D1
Ø D
Ø D
B
H
L

## Ecodesign

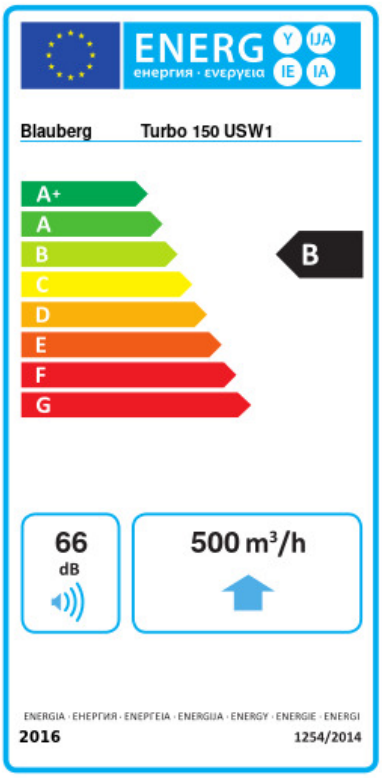


| Trademark | Blauberg | | | | | |
|---|---|---|---|---|---|---|
| Model | Turbo 150 USW1 | | | | | |
| Specific energy consumption (SEC) (kWh/(m²/a)) | Cold | | Average | | Warm | |
| | -53.8 | A+ | -26.7 | B | -11.2 | E |
| Type of ventilation unit | Unidirectional | | | | | |
| Type of drive installed | Variable speed | | | | | |
| Type of heat recovery system | None | | | | | |
| Maximum flow rate (m³/h) | 500 | | | | | |
| Electric power input (W) | 50 | | | | | |
| Reference flow rate (m³/s) | 0.097 | | | | | |
| Reference pressure difference (Pa) | 50 | | | | | |
| Specific power input (SPI) (W/(m³/h)) | 0.12 | | | | | |
| Control typology | Local demand control | | | | | |
| Maximum external leakage rates (%) | 2.7 | | | | | |
| Declared typology | RVU UVU | | | | | |
| Sound power level (dB(A)) | 66 | | | | | |
| The annual electricity consumption (AEC) (kWh/a) | Cold | | Average | | Warm | |
| | 64 | | 64 | | 64 | |
| The annual heating saved (AHS) (kWh/a) | Cold | | Average | | Warm | |
| | 5536 | | 2830 | | 1280 | |

## Accessories

### For round ducts

| Name | Photo | Description |
|---|---|---|
| SD 150/600 |  | Silencers for round ducts |
| SD 150/900 |  | Silencers for round ducts |
| SD 150/1200 |  | Silencers for round ducts |

### For round ducts

| Name | Photo | Description |
|---|---|---|
| KFBK 150 |  | Filter boxes for round ducts |
| KFBT 150 G4 | 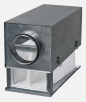 | Filter boxes with pocket filters for round ducts |
| KFBT 150 F5 |  | Filter boxes with pocket filters for round ducts |
| KFBT 150 F7 |  | Filter boxes with pocket filters for round ducts |

### For round ducts

| Name | Photo | Description |
|---|---|---|
| VRV 150 |  | Backdraft dampers with spring for round ducts |
| VKA 150 |  | Air dampers for round ducts |

### Water heaters

| Name | Photo | Description |
|---|---|---|
| WKH 150-2 |  | Duct water heaters for round ducts |
| WKH 150-4 |  | Duct water heaters for round ducts |

### Electrical heaters

| Name | Photo | Description |
|---|---|---|
| EKH 150-1.2 |  | Duct electrical heaters for round ducts |
| EKH 150-1.7 |  | Duct electrical heaters for round ducts |

| | | |
|---|---|---|
| EKH 150-2.0 |  | Duct electrical heaters for round ducts |
| EKH 150-2.4 |  | Duct electrical heaters for round ducts |
| EKH 150-3.4 |  | Duct electrical heaters for round ducts |

### Speed controllers

| Name | Photo | Description |
|---|---|---|
| CDT E1.8 |  | Thyristor speed controller |
| CDT1 E0.5 |  | Multi-speed switches |

### Speed control switches

| Name | Photo | Description |
|---|---|---|
| CDP-2/5 |  | Multi-speed switch |
| CDP-2/10 |  | Multi-speed switch |

### Humidity sensors

| Name | Photo | Description |
|---|---|---|
| HSE / HSI 1.5 |  | Sensors |
| TE / TI 1.5 |  | Timers |
| LSE / LSI 1.5 |  | Sensors |
| IRSE / IRSI 1.5 |  | Sensors |

### Fittings

| Name | Photo | Description |
|---|---|---|
| K 150 |  | Clamp for round flexible ducts |
| K 150 Zn |  | Clamp for round flexible ducts |