

Turbo 150 T

Mixed-flow inline fans

- Impeller type: Mixed-flow
- Casing material: Polypropylene
- Installation in any position
- Timer: Turn off timer

	Unit of measurement	Turbo 150 T	
Speed	-	1	2
Phases	-	1	
Minimum supply voltage	V	230	
Maximum supply voltage	V	230	
Power supply frequency	Hz	50/60	
Maximum airflow	m³/h	415	565
Weight	kg	2.95	
Transported air temperature (max)	°C	60	
Ingress protection rating	-	IPX4	
Ingress protection rating of the drive	-	IPX4	
Impeller material	-	Plastic	

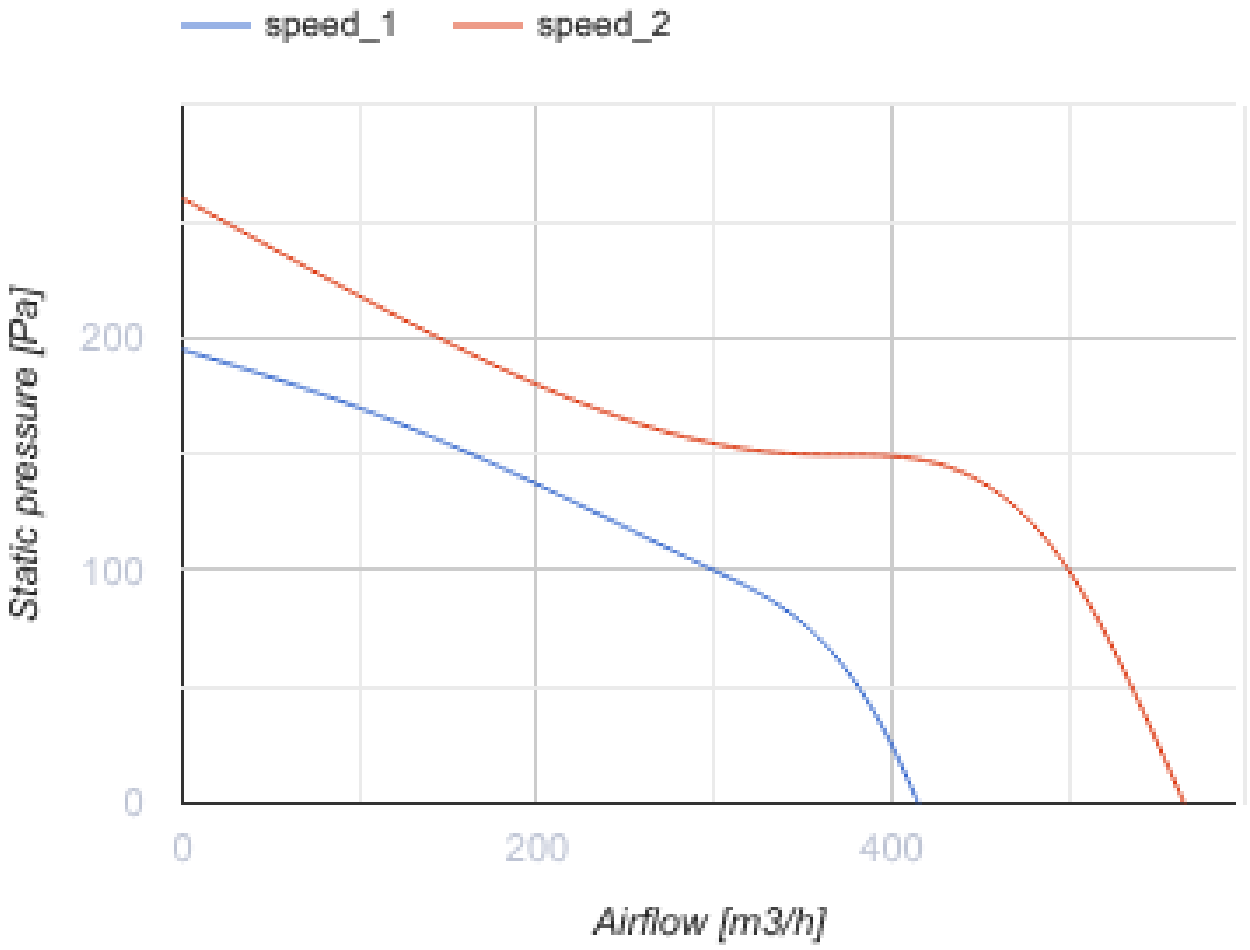
speed_1
speed_2
Static pressure [Pa]
200
100
0
0
200
400
Airflow [m3/h]

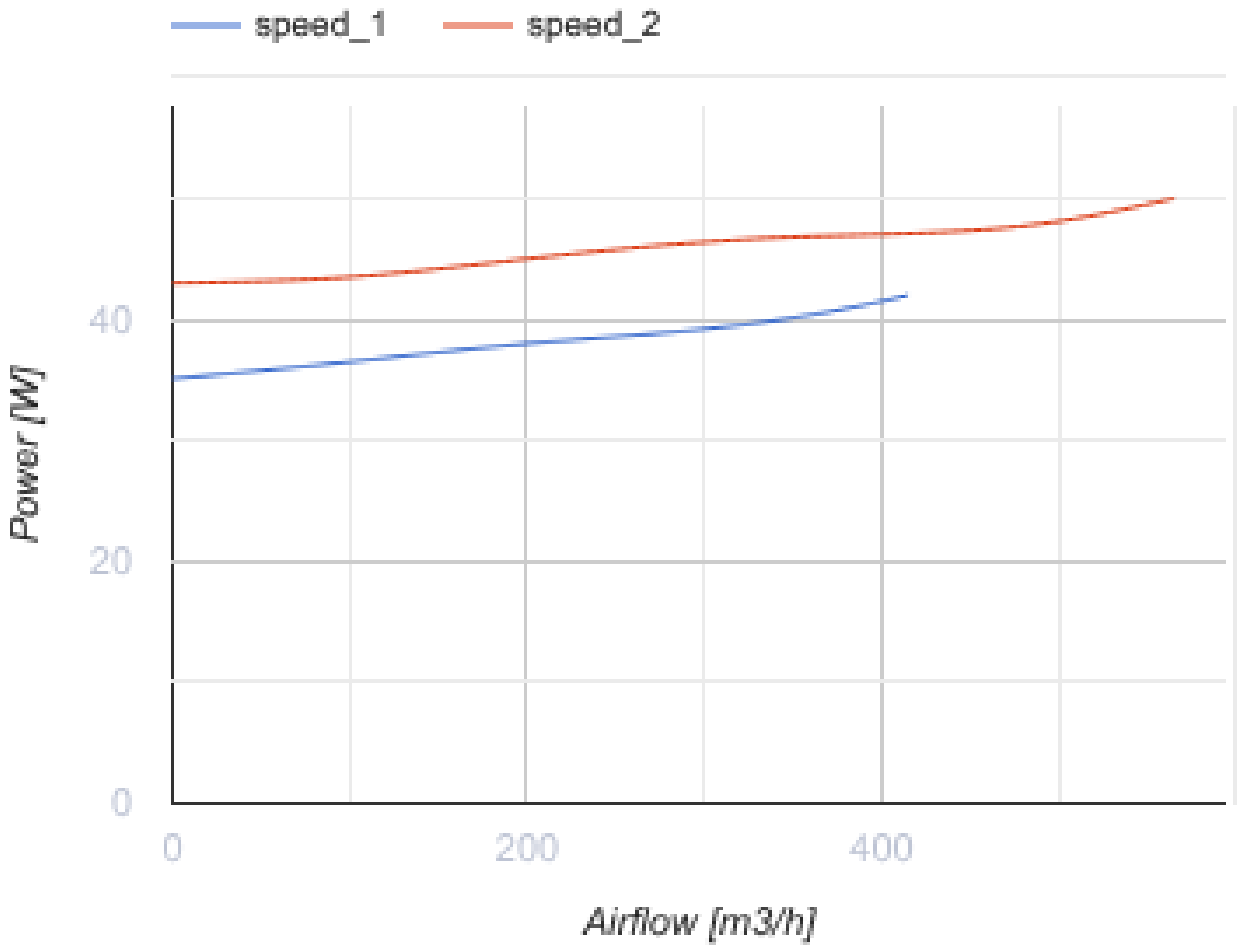

Dimensions

ØD	ØD1	B	H	L
148	187	220	251	289

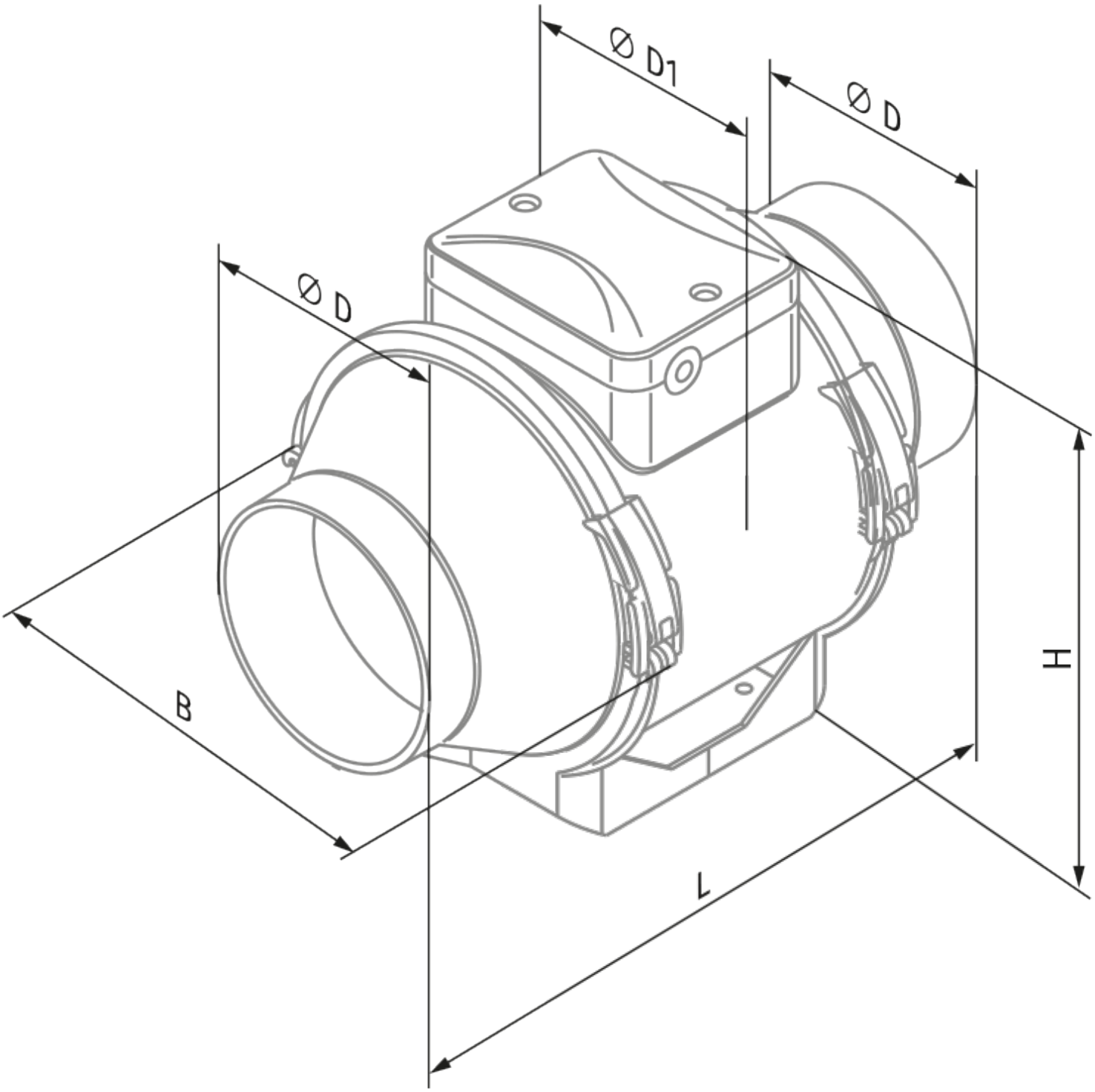
Ø D1
Ø D
Ø D
B
H
L

Ecodesign

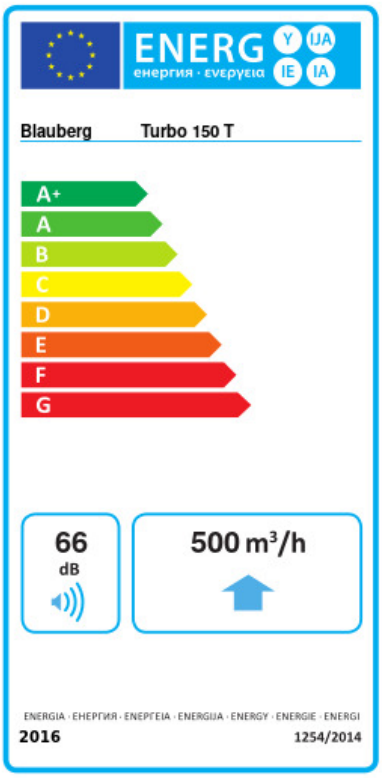

Trademark	Blauberg					
Model	Turbo 150 T					
Specific energy consumption (SEC) (kWh/(m²/a))	Cold		Average		Warm	
	-53.8	A+	-26.7	B	-11.2	E
Type of ventilation unit	Unidirectional					
Type of drive installed	Variable speed					
Type of heat recovery system	None					
Maximum flow rate (m³/h)	500					
Electric power input (W)	50					
Reference flow rate (m³/s)	0.097					
Reference pressure difference (Pa)	50					
Specific power input (SPI) (W/(m³/h))	0.12					
Control typology	Local demand control					
Maximum external leakage rates (%)	2.7					
Declared typology	RVU UVU					
Sound power level (dB(A))	66					
The annual electricity consumption (AEC) (kWh/a)	Cold		Average		Warm	
	64		64		64	
The annual heating saved (AHS) (kWh/a)	Cold		Average		Warm	
	5536		2830		1280	

Accessories

For round ducts

Name	Photo	Description
SD 150/600		Silencers for round ducts
SD 150/900		Silencers for round ducts
SD 150/1200		Silencers for round ducts

For round ducts

Name	Photo	Description
KFBK 150		Filter boxes for round ducts
KFBT 150 G4	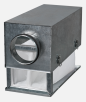	Filter boxes with pocket filters for round ducts
KFBT 150 F5		Filter boxes with pocket filters for round ducts
KFBT 150 F7		Filter boxes with pocket filters for round ducts

For round ducts

Name	Photo	Description
VRV 150		Backdraft dampers with spring for round ducts
VKA 150		Air dampers for round ducts

Water heaters

Name	Photo	Description
WKH 150-2		Duct water heaters for round ducts
WKH 150-4		Duct water heaters for round ducts

Electrical heaters

Name	Photo	Description
EKH 150-1.2		Duct electrical heaters for round ducts
EKH 150-1.7		Duct electrical heaters for round ducts

EKH 150-2.0		Duct electrical heaters for round ducts
EKH 150-2.4		Duct electrical heaters for round ducts
EKH 150-3.4		Duct electrical heaters for round ducts

Speed controllers

Name	Photo	Description
CDT E1.8		Thyristor speed controller
CDT1 E0.5		Multi-speed switches

Speed control switches

Name	Photo	Description
CDP-2/5		Multi-speed switch
CDP-2/10		Multi-speed switch

Humidity sensors

Name	Photo	Description
HSE / HSI 1.5		Sensors
TE / TI 1.5		Timers
LSE / LSI 1.5		Sensors
IRSE / IRSI 1.5		Sensors

Fittings

Name	Photo	Description
K 150		Clamp for round flexible ducts
K 150 Zn		Clamp for round flexible ducts