

Tubo-U 125 T

Inline axial fan for supply and exhaust ventilation

- Casing material: Plastic
- Timer: Turn off timer

	Unit of measurement	Tubo-U 125 T
Phases	-	N/A
Minimum supply voltage	V	220
Maximum supply voltage	V	240
Power supply frequency	Hz	50/60
Maximum airflow	m^3/h	195
Weight	kg	0.43
Ambient air temperature min	°C	1
Ambient air temperature max	°C	40
Ingress protection rating	-	IPX4
Impeller material	-	Plastic

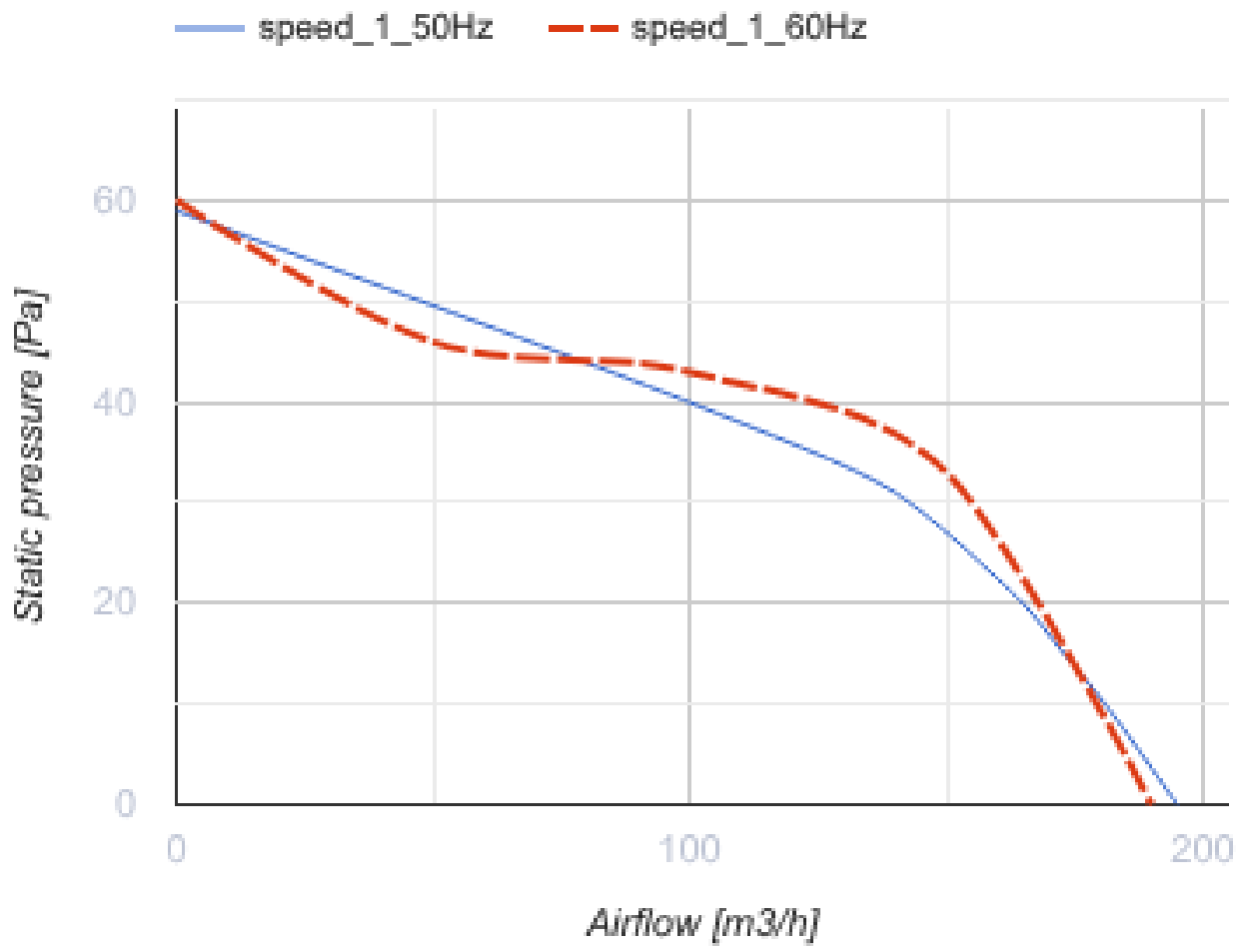

Dimensions

a	b	c	c1	Ø d
185	125	90	45	125

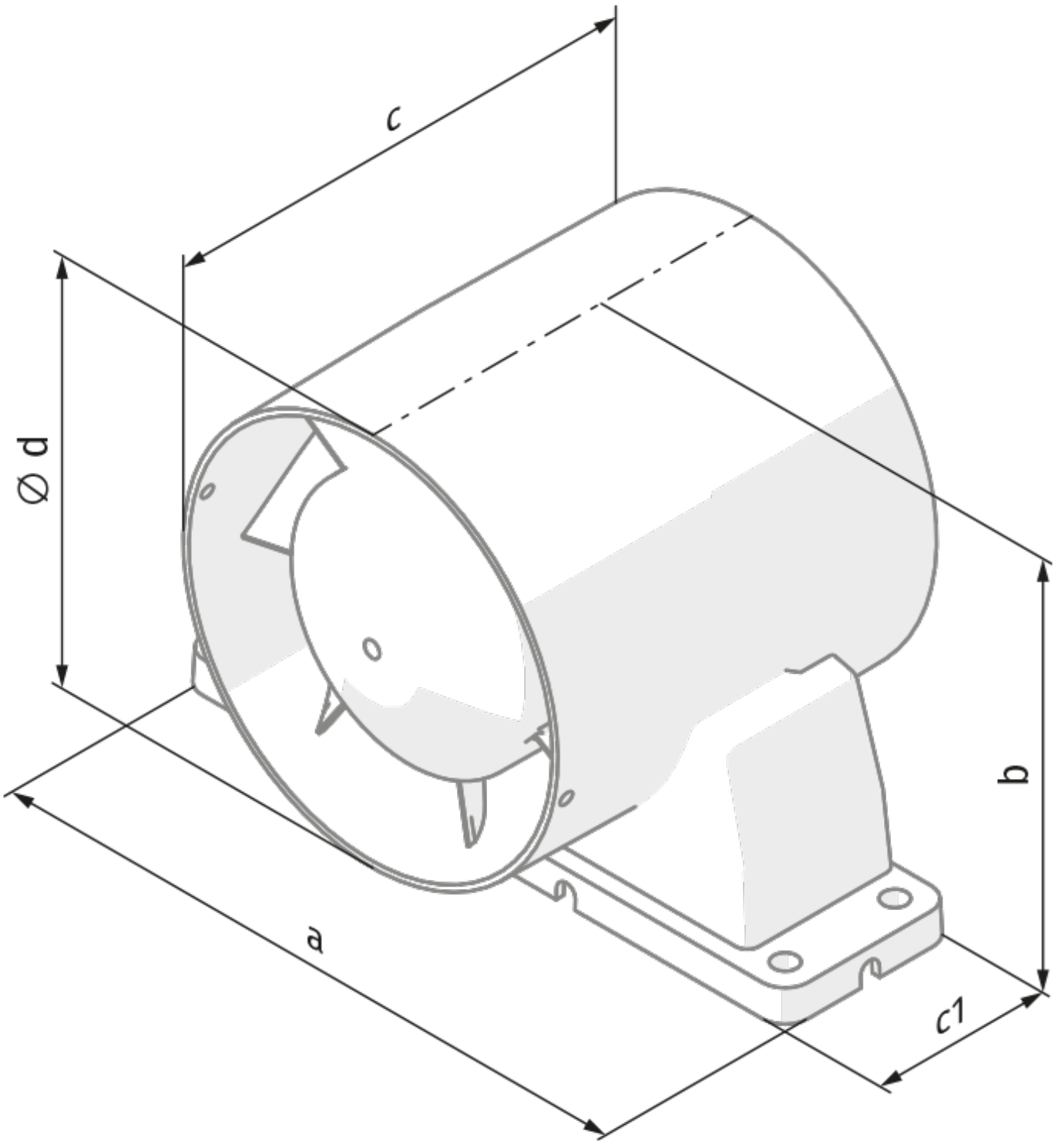
c
Ø d
b
a
c1