

Tubo-MZ 250

Inline axial fans

- Impeller type: Axial
- Casing material: Galvanized steel
- Installation in any position

	Unit of measurement	Tubo-MZ 250	
Speed	-	1	2
Phases	-	1	
Minimum supply voltage	V	220	
Maximum supply voltage	V	240	
Power supply frequency	Hz	50	60
Maximum airflow	m³/h	1070	
Weight	kg	3.97	
Transported air temperature (max)	°C	40	
Transported air temperature (min)	°C	-30	
Ingress protection rating	-	IPX4	
Ingress protection rating of the drive	-	IP44	
Impeller material	-	Aluminium	

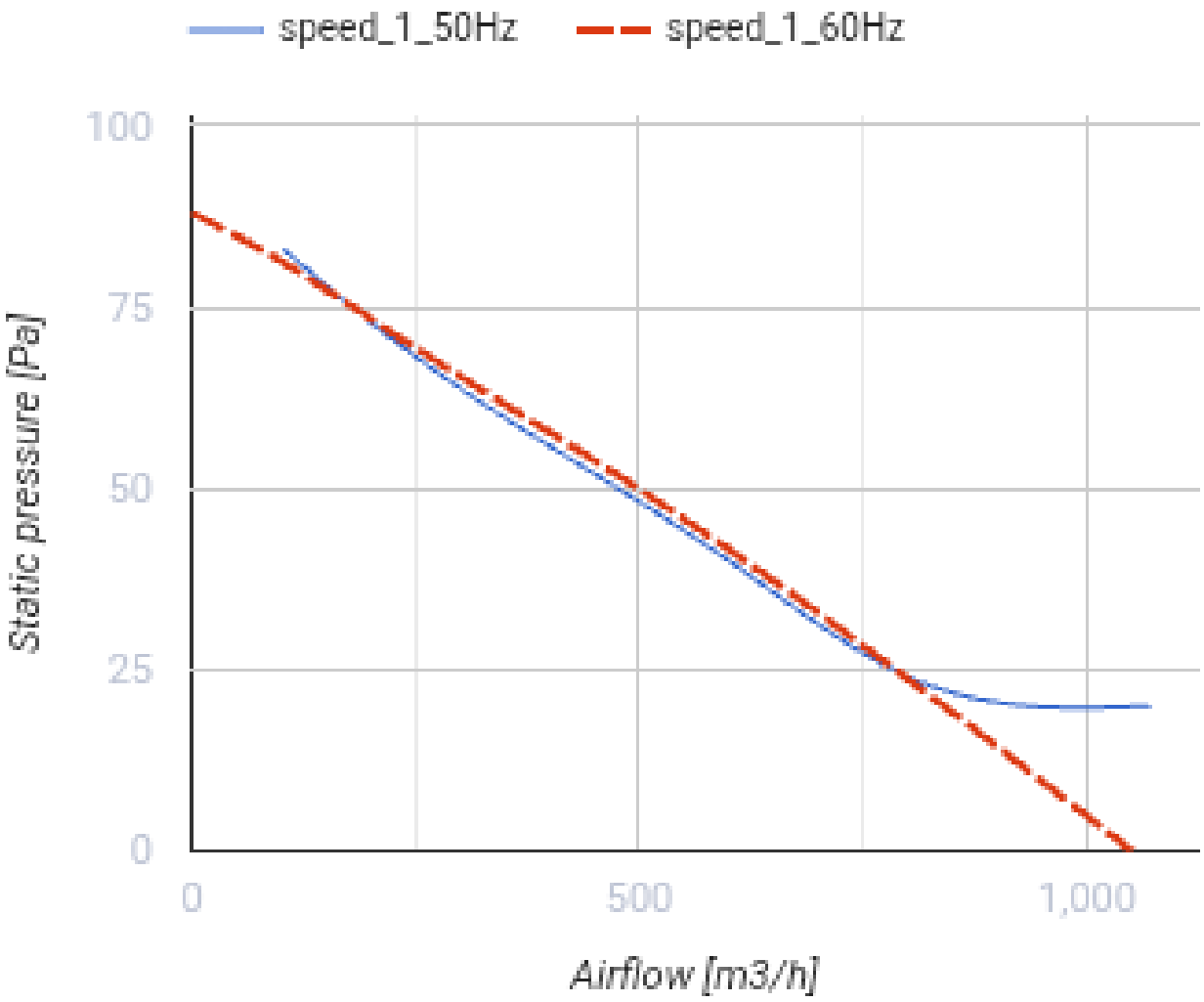
speed_1_50Hz
speed_1_60Hz
100
75
50
25
0
Static pressure [Pa]
0
500
1,000
Airflow [m3/h]

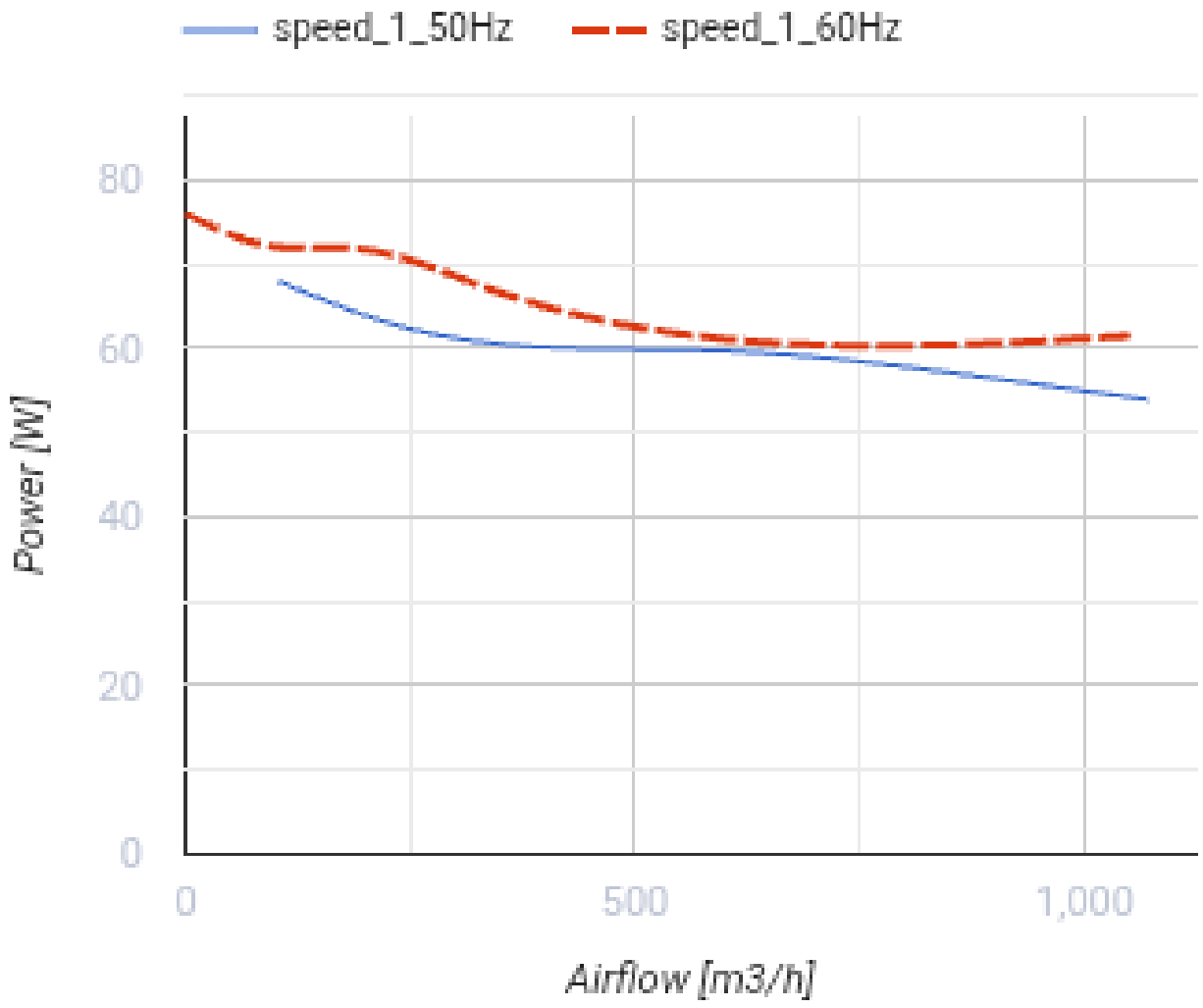

Dimensions

ØD	B	L	L1	L2
262	283	270	55	30

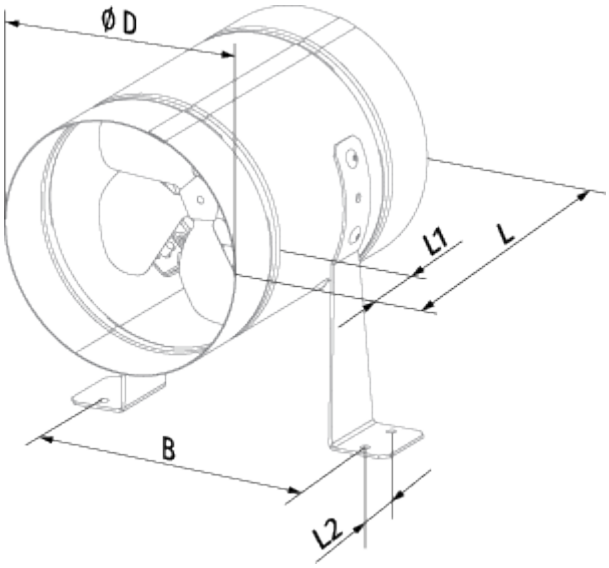
Ø D
L1
L
B
L2

Ecodesign

Trademark	Blauberg
Model	Tubo-MZ 250
Type of drive installed	External MSD or VSD
Type of heat recovery system	None
Nominal external pressure (Pa)	55
Maximum external leakage rates (%)	2.7
Static efficiency (%)	9.3
Declared typology	NRVU UVU
Effective electric power input (kW)	0.069
Sound power level (dB(A))	68

Accessories

Transformer speed controllers

Name	Photo	Description
CDR5E E3.5 TP		Single phase speed controller
CDR5E E5.0 TP		Single phase speed controller
CDR5E E7.5 TP		Single phase speed controller
CDR5E E1.5 TP		Single phase speed controller