

Tubo 125

Inline axial fan for supply and exhaust ventilation

- Casing material: Plastic

	Unit of measurement	Tubo 125
Phases	-	1
Minimum supply voltage	V	220
Maximum supply voltage	V	240
Power supply frequency	Hz	50/60
Maximum airflow	m^3/h	195
Weight	kg	0.43
Ambient air temperature min	°C	1
Ambient air temperature max	°C	40
Ingress protection rating	-	IPX4
Impeller material	-	Plastic

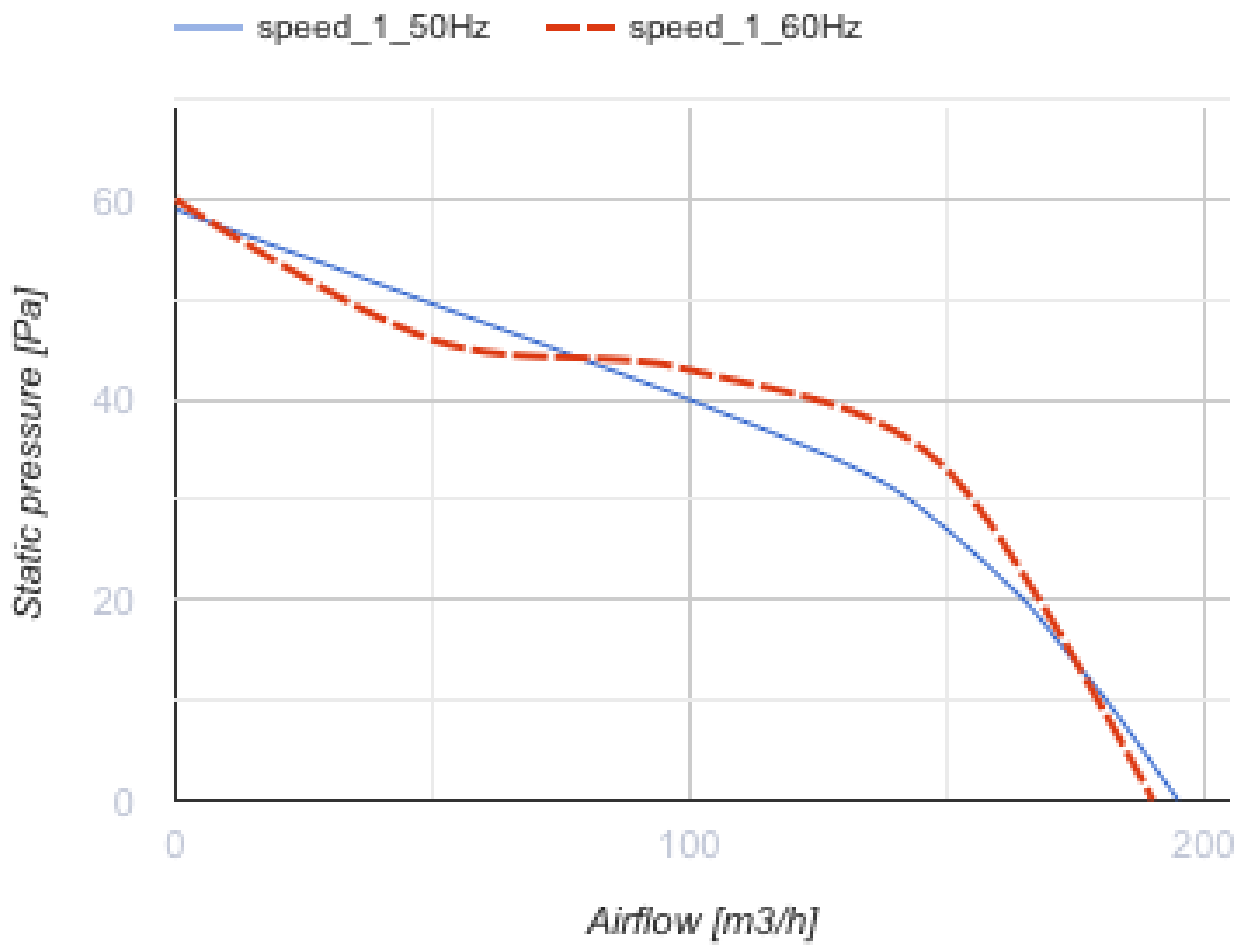

Dimensions

c	Ø d
90	125

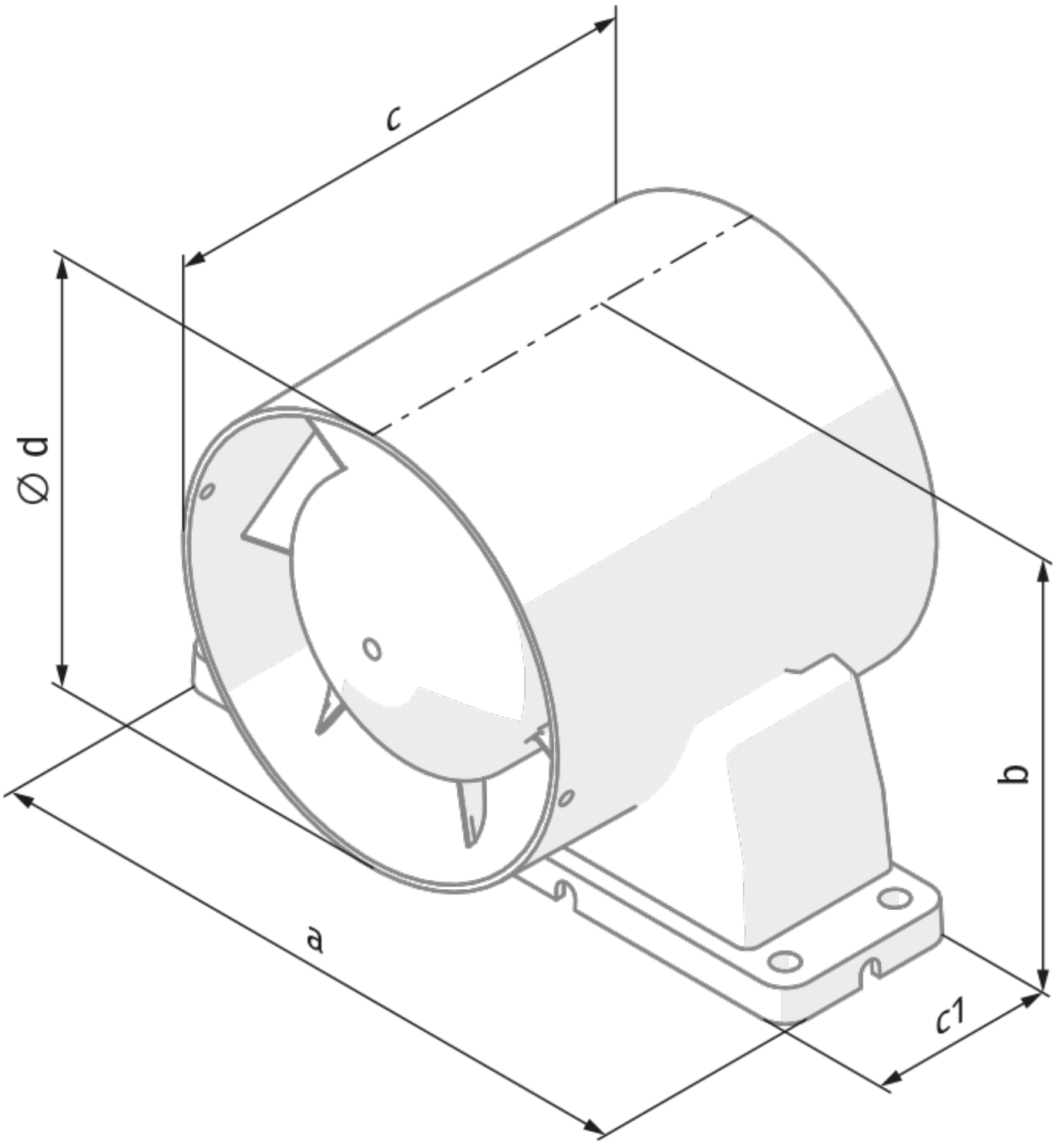
c
Ø d
b
a
c1

Ecodesign

Trademark	Blauberg					
Model	Tubo 125					
Specific energy consumption (SEC) (kWh/(m²/a))	Cold		Average		Warm	
	-31	B	-14.6	E	-5.2	F
Type of ventilation unit	Unidirectional					
Type of drive installed	Single speed					
Type of heat recovery system	None					
Maximum flow rate (m³/h)	195					
Electric power input (W)	22					
Reference flow rate (m³/s)	0.048					
Specific power input (SPI) (W/(m³/h))	0.082					
Control typology	Manual control					
Maximum external leakage rates (%)	2.7					
Sound power level (dB(A))	59					
Declared typology	RVU UVU					
The annual electricity consumption (AEC) (kWh/a)	Cold		Average		Warm	
	102		102		102	
The annual heating saved (AHS) (kWh/a)	Cold		Average		Warm	
	3355		1715		776	