

Tubo 100

Inline axial fan for supply and exhaust ventilation

- Casing material: Plastic

	Unit of measurement	Tubo 100
Phases	-	1
Maximum supply voltage	V	240
Minimum supply voltage	V	220
Power supply frequency	Hz	50/60
Maximum airflow	m^3/h	102
Weight	kg	0.41
Ambient air temperature min	°C	1
Ambient air temperature max	°C	40
Ingress protection rating	-	IPX4
Impeller material	-	Plastic

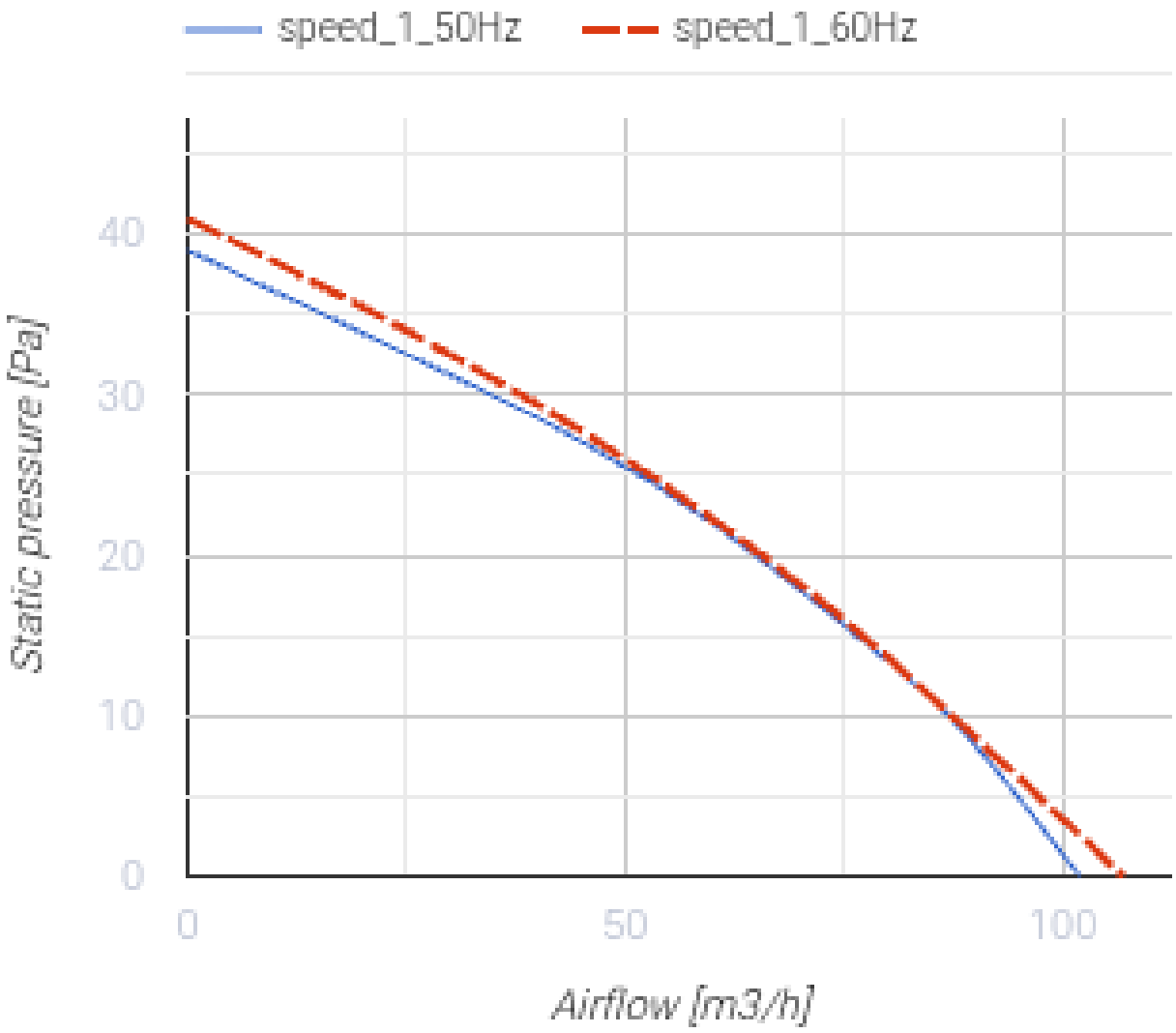

Dimensions

c	Ø d
100	100

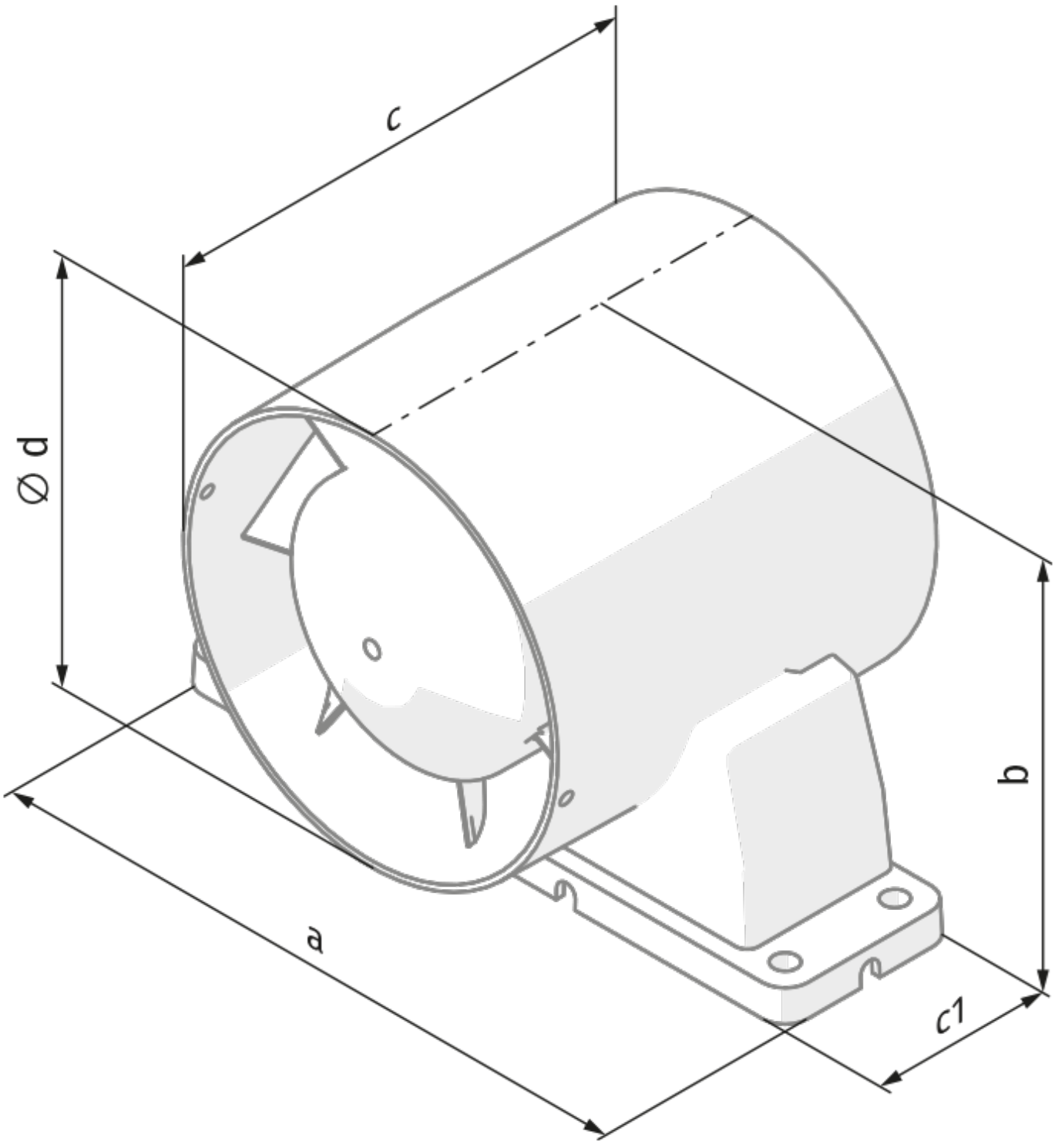
c
Ø d
b
a
c1

Ecodesign

Trademark	Blauberg					
Model	Tubo 100					
Specific energy consumption (SEC) (kWh/(m²/a))	Cold		Average		Warm	
	-30.2	B	-13.8	E	-4.4	F
Type of ventilation unit	Unidirectional					
Type of drive installed	Single speed					
Type of heat recovery system	None					
Maximum flow rate (m³/h)	102					
Electric power input (W)	16					
Reference flow rate (m³/s)	0.027					
Specific power input (SPI) (W/(m³/h))	0.107					
Control typology	Manual control					
Maximum external leakage rates (%)	2.7					
Declared typology	RVU UVU					
Sound power level (dB(A))	58					
The annual electricity consumption (AEC) (kWh/a)	Cold		Average		Warm	
	135		135		135	
The annual heating saved (AHS) (kWh/a)	Cold		Average		Warm	
	3355		1715		776	